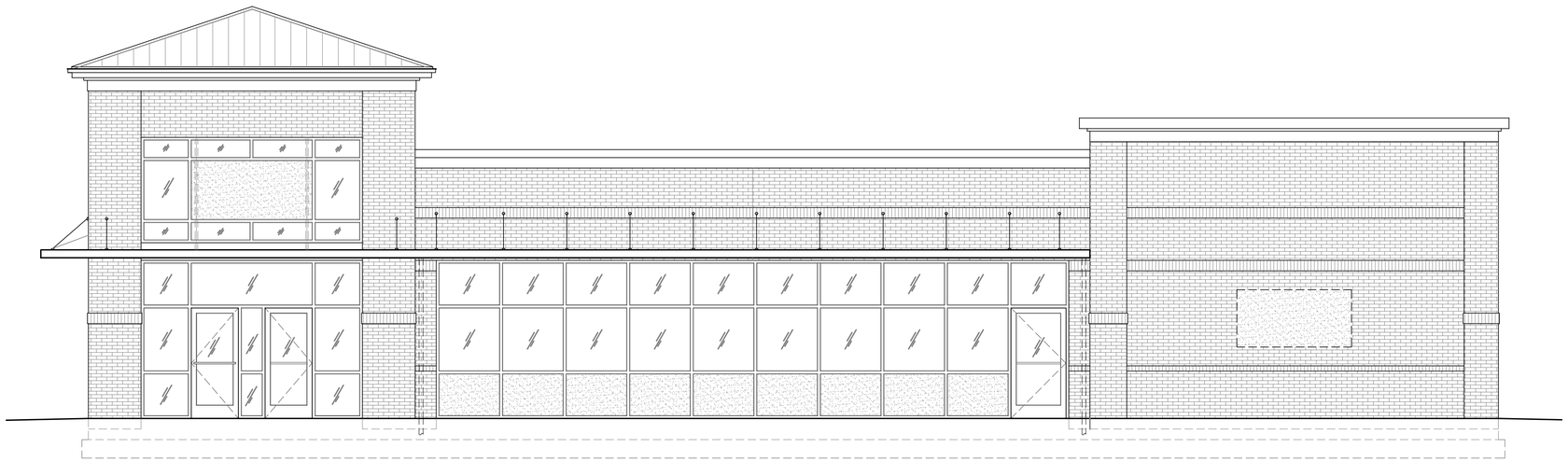

FIVESTAR STORE #4460

NEWCOMB OIL CO., LLC

3070 PEMBROKE RD.
HOPKINSVILLE, KY 42240

CMW, INC.
Architect
249 E Main Street, Suite 100, Lexington, KY 40507
O 859.254.6623

POAGE ENGINEERING & ASSOCIATES, INC
Structural Engineer
880 Sparta Court, Suite 200, Lexington, KY 40504
O 859.255.9034

CMTA ENGINEERING CONSULTANTS
MEP Engineers
10411 Meeting Street, Prospect, KY 40059
O 502.326.3085

NEWCOMB OIL COMPANY, LLC.
Owner
951 Withrow Ct., Bardstown, KY 40004
O 502.348.3961

BCD, INC.
General Contractor
1962 Filiatreau Lane, Bardstown, KY 40004
O 502.348.2305

VICINITY MAP



PROJECT INFORMATION

APPLICABLE BUILDING CODES

BUILDING CODE:	IBC 2015 / KBC 2018
ACCESSIBILITY CODE:	ADA 2010 / ANSI 2009
ENERGY CODE:	IECC 2012

USE AND OCCUPANCY:	M - MERCANTILE, S - STORAGE, B-BUSINESS
CONSTRUCTION TYPE:	V-B
BUILDING INFORMATION:	MERCANTILE CONVENIENCE GAS STATION
BUILDING:	6,519 s.f.
TOTAL BUILDING SIZE:	6,519 s.f.
FIRE SUPPRESSION:	NONE

OCCUPANCY ALLOWANCE

FUNCTION OF SPACE	ALLOWANCE	AREA	OCCUPANCY
MERCANTILE	60 GROSS	4,445	74
BUSINESS	100 GROSS	85	1
STORAGE	300 GROSS	1,989	7
	TOTAL OCCUPANCY ALLOWANCE:		82

INDEX OF DRAWINGS

STRUCTURAL

S0.0 STRUCTURAL NOTES
S0.1 STRUCTURAL NOTES
S1.0 FOUNDATION PLAN
S1.1 LOW ROOF FRAMING PLAN
S1.2 HIGH ROOF & CEILING FRAMING PLANS
S2.1 SECTIONS & DETAILS
S2.2 SECTIONS & DETAILS
S2.3 SECTIONS & DETAILS
S2.4 SECTIONS & DETAILS
S2.5 SECTIONS & DETAILS

ARCHITECTURAL

A1.01 FLOOR PLAN
A1.02 DIMENSIONED FLOOR PLAN
A1.03 EQUIPMENT AND CASEWORK PLAN
A1.04 FINISH PLAN
A1.05 REFLECTED CEILING PLAN
A1.06 ROOF PLAN
A1.07 NORTH WALL COOLER / FREEZER PLANS
A1.08 NORTH WALL COOLER / FREEZER PLANS
A2.01 EXTERIOR ELEVATIONS
A2.02 EXTERIOR ELEVATIONS
A2.03 INTERIOR ELEVATIONS
A2.04 INTERIOR ELEVATIONS
A2.05 INTERIOR ELEVATIONS
A2.06 INTERIOR ELEVATIONS
A3.03 DOOR AND FRAME SCHEDULE
A3.04 SCHEDULES
A5.01 BUILDING SECTIONS
A5.02 BUILDING SECTIONS / DUMPSTER ENCLOSURE
A5.03 WALL SECTIONS
A5.04 WALL SECTIONS

ARCHITECTURAL (cont'd)

A5.05 WALL SECTIONS AND DETAILS
A5.06 ENLARGED DETAILS
A5.07 ENLARGED DETAILS
A5.08 WALK-IN COOLER / FREEZER SECTIONS AND DETAILS

PLUMBING

P1.01 PLUMBING LEGEND AND DETAILS
P2.01A FLOOR PLAN - SANITARY WASTE AND VENT
P2.01B FLOOR PLAN - SANITARY WASTE AND VENT
P2.02 FLOOR PLAN - WATER AND GAS

MECHANICAL

M1.01 MECHANICAL LEGEND AND SCHEDULES
M2.01 FLOOR PLAN - MECHANICAL
M3.01 MECHANICAL SECTION VIEWS AND DETAILS

ELECTRICAL

E1.00 ELECTRICAL LEGEND AND NOTES
E2.00 ELECTRICAL LIGHTING
E2.01 ELECTRICAL PLANS
E3.00 ELECTRICAL POWER / SYSTEMS
E4.00 ELECTRICAL RISER AND SCHEDULE
E5.00 ELECTRICAL SCHEDULES
UE3.00 ELECTRICAL UNDERSLAB PLAN

BILL PICKERING REGISTERED No. 4915 COMMONWEALTH OF KENTUCKY ARCHITECT
31 MAY 2024

COVERSHEET
FiveStar - #4460 Hopkinsville
NEWCOMB OIL CO., LLC
3070 PEMBROKE RD
HOPKINSVILLE, KY 42240

CONSTRUCTION DOCUMENTS

Issue Date:
MAY 31, 2024

AHJ SEAL

Project Number
24010.01

CMW
The Shape Of Ideas

Architecture
Civil Engineering Landscape Architecture

a: 249 East Main Street, Suite 100
Lexington, Kentucky 40507
o: (859) 254-6623
w: www.cmwaec.com

FAILURE TO ABIDE BY DESIGN DOCUMENTS OR TO OBTAIN GUIDANCE:
THE DESIGN PROFESSIONAL WAIVES ANY AND ALL RESPONSIBILITY AND LIABILITY FOR PROBLEMS WHICH ARISE FROM FAILURE TO FOLLOW THESE PLANS, SPECIFICATIONS AND THE DESIGN INTENT THEY CONVEY, OR FOR OTHERS' FAILURE TO OBTAIN AND/OR FOLLOW THE DESIGN PROFESSIONAL'S GUIDANCE WITH RESPECT TO ANY ERRORS, OMISSIONS, INCONSISTENCIES, AMBIGUITIES OR CONFLICTS WHICH ARE ALLEGED.

OWNERSHIP OF INSTRUMENTS OF SERVICE AND PROTOTYPE STORE DESIGN:
ALL REPORTS, DRAWINGS, SPECIFICATIONS, DIGITAL DATA FILES, FIELD DATA, NOTES AND OTHER DOCUMENTS AND INSTRUMENTS PREPARED BY CMW, INC. ARE CMW, INC'S "INSTRUMENTS OF SERVICE". THE "PROTOTYPE STORE DESIGN" SHALL REMAIN THE PROPERTY OF NEWCOMB OIL CO., LLC, WHO SHALL RETAIN ALL COMMON LAW, STATUTORY AND OTHER RESERVED RIGHTS INCLUDING COPYRIGHT THERETO.

STRUCTURAL QUALITY ASSURANCE PLAN

GENERAL

THE NEW STRUCTURE TO BE CONSTRUCTED IS ASSIGNED BY THE KENTUCKY BUILDING CODE, 2018 EDITION, TO SEISMIC USE GROUP AND SEISMIC DESIGN AS SPECIFIED. AS SUCH, THE BUILDING CODE MANDATES SPECIAL INSPECTION (SECTION 1704), SPECIAL INSPECTIONS FOR WIND RESISTANCE (SECTION 1705.11). SPECIAL INSPECTIONS FOR SEISMIC RESISTANCE (SECTION 1705.12). STRUCTURAL OBSERVATION FOR SEISMIC RESISTANCE (SECTION 1704.6.1) AND STRUCTURAL OBSERVATIONS FOR WIND REQUIREMENTS (SECTION 1704.6.2). STRUCTURAL QUALITY ASSURANCE PLAN SPECIFICALLY IDENTIFIES THE RESPONSIBILITIES OF THE CONTRACTOR AND THE SPECIAL INSPECTOR IN PERFORMING THE REQUIRED TESTING AND INSPECTION OF THE STRUCTURAL WORK.

CONTRACTOR RESPONSIBILITIES

In accordance with Section 1704.4 of the Building Code, the Contractor shall submit to the Architect a written statement of responsibility that contains the following:

1. Acknowledgement of awareness of the special requirements contained within this Structural Quality Assurance Plan.
2. Acknowledgement that control shall be exercised to obtain conformance with the construction documents approved by the Building Official.
3. Procedures for exercising control with the Contractor's organization, the method and frequency of reporting, and the distribution of reports.
4. Identification and qualifications of the person(s) exercising such control and their position(s) in the organization.

The Structural Testing / Inspection Agency that is to act as the Special Inspector will be hired by the Owner.

Contractor shall pay for any additional structural testing/inspection required for work or materials not complying with the Construction Documents due to negligence or nonconformance and shall pay for any additional structural testing/inspection required for his convenience.

The Contractor is responsible to ensure that the Special Inspector is present for all work requiring special inspection. Any work that requires special inspection and is performed without the Special Inspector being present is subject to being demolished and reconstructed.

The Contractor has the following responsibilities to the Special Inspector:

1. Provide copy of Construction Documents to the Special Inspector.
2. Notify the Special Inspector sufficiently in advance of operations to allow assignment of personnel and scheduling of tests.
3. Cooperate with Special Inspector and provide access to work.
4. Provide samples of materials to be tested in required quantities.
5. Provide storage space for the Special Inspector's exclusive use, such as for storing and curing concrete testing samples.
6. Provide labor to assist the Special Inspector in performing tests/inspections.

SOILS & ROCK BEARING

The Special Inspector shall perform the following:

1. Verify structural fill complies with specifications and the geotechnical report.
2. Observe proofrolling.
3. Perform field density tests to verify compaction of structural fill. As a minimum, perform one test per lift for every 2500 square feet of fill placed.
4. Inspect footing trenches & ensure proper bearing on earth & conc. fill to earth per geotechnical report and specifications.

NON-SHRINK GROUT UNDER STEEL BASE PLATES

The Special Inspector shall perform the following:

1. Compressive strength tests per ASTM C109.
2. Number of Tests: One test for each ten bags of grout used or minimum of one test for each day of grouting.
3. Cube Size: 2-inch x 2-inch.
4. Test Schedule: One cube at 3 days, two cubes at 7 days, three cubes at 28 days.

STEEL JOIST

The Contractor shall perform the following:

1. Joists shall be manufactured and designed in accordance with the Steel Joist Institute specifications. Submit letter of compliance.
2. Submit shop drawings from a SJI certified firm. The Special Inspector shall perform periodic inspections of the following:
3. Visual inspection of bolted and welded connections.
4. Verify installation of bridging or braces.
5. Verify connection for top and bottom chords.
6. Verify reinforcement of members for concentrated loads.
7. Verify proper bearing.

CAST-IN-PLACE CONCRETE

The Contractor shall perform the following:

1. Establish concrete mix design proportions per ACI 318, Chapter 5. Submit 5 copies (minimum) of the concrete mix designs. Include the following:
   a. Type and quantities of materials
   b. Slump
   c. Air content
   d. Fresh unit weight
   e. Aggregates sieve analysis
   f. Design compressive strength
   g. Location of placement in structure
   h. Method of placement
   i. Method of curing
   j. Seven-day and 28-day compressive strengths
2. Submit a certification from each manufacturer or supplier stating that materials meet the requirements of the specified ASTM and ACI standards.
3. Submit certification that the ready-mixed concrete plant complies with the requirements of the National Ready Mix Concrete Association.

The Special Inspector shall perform the following:

1. Verify quantity, location, and placement of reinforcing steel prior to concrete placement.
2. Examine concrete in truck to verify that concrete appears properly mixed.
3. Perform a slump test as deemed necessary for each concrete load. Record if water or admixtures are added to the concrete at the job site. Perform additional slump tests after job site adjustments.
4. Mold four specimens per set for compressive strength testing; one set for each 50 cubic yards (or portion thereof) of each mix design in any one day. For each set set molded, record:
   a. Slump
   b. Air content
   c. Unit weight
   d. Temperature, ambient and concrete
   e. Location of placement
   f. Any pertinent information, such as addition of water, addition of admixtures, etc.
5. Perform one 7-day and two 28-day compressive strength tests. (Use one as a spare to be broken as directed by the Structural Engineer if compressive strengths do not appear adequate.)
6. Reports of compressive strength tests shall contain the project identification name and number, date of concrete placement, concrete design compressive strength, location of concrete placement in structure, concrete mix proportions and materials, compressive breaking strength and type of break.

CONCRETE MASONRY

Contractor shall perform the following:

1. Submit a certification from each manufacturer or supplier stating that the following materials comply with the specified ASTM or ACI Standards:
   a. Concrete masonry units.
   b. Mortar materials: Portland cement, hydrated lime, and aggregates.
   c. Grout materials: Portland cement and aggregates.
   d. Joint reinforcement steel.
   e. Reinforcing steel.
2. For reinforcing steel used in concrete masonry walls, submit certified mill test reports.

Special Inspector shall perform the following:

1. Verify compressive strength of concrete masonry units, mortar, and coarse grout for every 5,000 sq. ft. of surface area (or portion thereof) as follows:
   a. Three (3) concrete masonry units shall be tested in accordance with ASTM C140.
   b. Six (6) mortar cube specimens shall be tested, three (3) at 7-days and three (3) at 28-days, in accordance with ASTM C109.
   c. Four (4) coarse grout specimens shall be tested, two (2) at 7-days and two (2) at 28-days, in accordance with ASTM C-109.
   d. In lieu of individual tests of masonry units, mortar, and grout, perform one (1) prism test (which consists of three prisms) in accordance with ASTM E447.
2. Provide continuous inspection to verify compliance of the following:
   a. Cleanliness of grout space prior to grouting.
   b. Placement of grout in reinforced cells.
   c. Preparation of required grout and mortar specimens.
   d. Welding of reinforcing bars.
3. Provide periodic inspection to verify compliance of the following:
   a. Proportions of site-prepared mortar or grout.
   b. Construction of mortar joints.
   c. Quantity, size, location, and support of reinforcing steel.
   d. Quantity, size, and placement of horizontal joint reinforcement.
   e. Type, size and location of anchors.
   f. Protection of masonry during cold or hot weather.

STEEL DECK

The Contractor shall perform the following:

1. Submit mill certification that the supplied steel complies with the specifications. The Special Inspector shall perform periodic inspections of the following:
2. Verify general alignment and deck lap.
3. Verify screws/welds for size and pattern.
4. Verify spacing and type of side lap attachments.
5. Verify installation of deck closures.

STRUCTURAL STEEL

The Contractor shall perform the following:

1. The steel fabricator shall be AISC or AWS Certified, refer to Spec. 05120.
2. Submit certified mill test reports for structural steel.
3. Submit manufacturer's certificate of compliance fro high-strength bolting and weld filler materials.

** If the fabricator is not certified, then the fabricator shall reimburse the owner for the costs of these tests.

The Special Inspector shall perform the following:

1. Provide continuous inspection to verify compliance of the following:
   a. Inspection of slip-critical connections, except periodic inspection may be performed when using torque control bolts (twist off)
   b. Complete and partial penetration groove welds. Ultrasonically inspect 100% of the complete penetration welds.
   c. Multi-pass fillet welds and single-pass fillet welds greater than 5/16".
2. Provide periodic inspection to verify compliance of the following:
   a. Material verification of high-strength bolts, nuts, and washers.
   b. Material verification of structural steel.
   c. Material verification of weld filler material.
   d. Anchor bolt size, configuration, and embedment shall be verified prior to placement of concrete.
   e. Visually inspect all field-welded connection. Visual inspection of welded joints includes periodic examination of fitup.
   f. Verify stud shear connector spacing and location. Visually inspect welding of stud shear connectors.
3. Weld Inspections:
   a. Weld inspections shall be in accordance with AWS D1.1.
   b. Review and verify compliance of written welding procedures with AWS requirements.
   c. Verify that welding procedures are being adhered to during field welding.
   d. Verify welder qualifications.
   e. Use all means necessary to determine the quality of welds. The inspector may use gamma ray, magnafluz, trepanning, sonics or any other aid to visual inspection that the Special Inspector may deem necessary to be assured of the adequacy of the welding.
   f. Keep a systematic record of all welds that include, in addition to other required records, the identification marks of welders, a list of defective welds, and the manner of correcting defects.
4. Bolting inspection and testing shall be in accordance with AISC Specifications for Structural Joints Using ASTM A325 or A490 Bolts.

SPECIAL INSPECTOR RESPONSIBILITIES

The Special Inspector shall maintain records of inspections in accordance with Section 1704.1.2 and shall distribute these records to the Architect and Structural Engineer on a weekly basis. At the conclusion of the project, the Special Inspector shall submit a final report including a written statement that the special inspections during construction have complied with this Structural Quality Assurance Plan and that any discrepancies noted during construction have been corrected.

WOOD CONSTRUCTION

Special inspector shall perform the following:

1. Check all wood framing layout and confirm compliance with plans, specs, and shop drawings.
2. Visually inspect truss layout and anchorage and confirm compliance with plans, specs, and shop drawings.
3. Visually inspect all roof and wall sheathing attachments and confirm compliance with plans, specs, and shop drawings.

SPECIAL INSPECTIONS PER CHAPTER 17 OF THE KENTUCKY BUILDING CODE

SECTION	ITEM	REQUIRED? YES	REQUIRED? NO	REMARKS
1704.2.5	FABRICATORS	X		STEEL FABRICATION SPECIAL INSPECTION IS REQUIRED IF THE FABRICATOR IS NOT A.I.S.C. OR AWS CERTIFIED.
1704.6.1	STRUCTURAL OBSERVATION FOR SEISMIC REQUIREMENTS		X	SEISMIC DESIGN CATEGORY "D"
1704.6.2	STRUCTURAL OBSERVATION FOR WIND REQUIREMENTS		X	Vasd = 93mph.
1705.2	STEEL	X		PER AISC 360 & TABLE 1705.2.2
1705.3	CONCRETE	X		PER TABLE 1705.3
1705.4	MASONRY		X	LEVEL B TMS 402/ACI 530/ASCE 5
1705.5	WOOD	X		PER SECTION 1705.5
1705.6	SOILS	X		PER TABLE 1705.6
1705.7	DRIVEN DEEP FOUNDATIONS		X	NONE
1705.8	CAST IN PLACE DEEP FOUNDATIONS		X	NONE
1705.9	HELICAL PILE FOUNDATIONS		X	NONE
1705.11.1	WIND - STRUCTURAL WOOD		X	Vasd = 93mph.
1705.11.2	WIND - COLD FORMED STEEL FRAMING		X	NONE
1705.11.3	WIND - WIND RESISTING COMPONENTS		X	NONE
1705.12.1	SEISMIC - STRUCTURAL STEEL	X		SEISMIC DESIGN CATEGORY "D"
1705.12.2	SEISMIC - STRUCTURAL WOOD		X	PER SECTION 1705.12.2
1705.12.3	SEISMIC - COLD FORMED STEEL FRAMING		X	NONE
1705.12.4	DESIGNATED SEISMIC SYSTEMS	X		PER SECTION 1705.12.4
1705.12.5	SEISMIC - ARCHITECTURAL COMPONENTS - INTERIOR/EXTERIOR NON-LOAD BEARING WALLS AND VENEER IN STRUCTURES		X	SEISMIC DESIGN CATEGORY "D"
1705.12.6	SEISMIC - MECHANICAL AND ELECTRICAL COMPONENTS	X		SEISMIC DESIGN CATEGORY "D"
1705.12.7	SEISMIC - STORAGE RACKS AND ACCESS FLOORS		X	NONE
1705.14	SPRAYED FIREPROOFING		X	1705.14
1705.15	FIREPROOFING		X	1705.15
1705.16	E.I.F.S.		X	PER SECTION 1705.16
1705.17	FIRE RESISTANT PENETRATIONS & JOINTS		X	NONE
1705.18	SMOKE CONTROL		X	NONE

EARTHQUAKE DESIGN DATA

RISK CATEGORY	II
IMPORTANCE FACTOR	1.0
S_s	0.435
S_1	0.184
SITE CLASS	D
S_{DS}	0.421
S_{D1}	0.274
SEISMIC DESIGN CATEGORY	D
BASIC SEISMIC-FORCE RESISTING SYSTEM	SPECIAL REINFORCED CONCRETE SHEAR WALLS
DESIGN BASE SHEAR	0.0842xW
SEISMIC RESPONSE COEFFICIENT (C_s)	0.0842
RESPONSE MODIFICATION FACTOR	5
ANALYSIS PROCEDURE	ELFP

SNOW DESIGN DATA

GROUND SNOW LOAD (P_g)	15 PSF
MINIMUM SLOPED ROOF SNOW LOAD (P_m)	15 PSF
FLAT ROOF SNOW LOAD (P_f)	15 PSF
IMPORTANCE FACTOR	1.0
THERMAL FACTOR (C_t)	1.0
SNOW EXPOSURE FACTOR (C_e)	0.9

DESIGN LIVE LOADS

ROOF	20 PSF
1st FLOOR	100 PSF

WIND DESIGN DATA

ULTIMATE DESIGN WIND SPEED (V_{ult})		115 MPH
NOMINAL DESIGN WIND SPEED (V_{asd})		89 MPH
RISK CATEGORY		II
WIND EXPOSURE CATEGORY		B
INTERNAL PRESSURE COEFFICIENT		+/- 0.18
COMPONENTS AND CLADDING [H<30 FT]		
	EXPOSURE B (PSF)	EXPOSURE C (PSF)
ROOF 0 TO 7 DEGREES		
INTERIOR ZONE	9.7 -23.8	13.5 -33.3
END ZONE	9.7 -39.9	13.5 -55.8
CORNER ZONE	9.7 -60.1	13.5 -84.1
ROOF >7 TO 27 DEGREES		
INTERIOR ZONE	13.7 -21.8	19.1 -30.5
END ZONE	13.7 -37.9	19.1 -50.0
CORNER ZONE	13.7 -56.0	19.1 -78.4
INTERIOR ZONE	21.8 -23.8	30.5 -33.3
END ZONE	21.8 -27.8	30.5 -38.9
CORNER ZONE	21.8 -27.8	30.5 -38.9
WALLS		
INTERIOR ZONE	23.8 -25.8	33.3 -36.1
END ZONE	23.8 -31.9	33.3 -44.6

CMW The Shape of Ideas

Architecture
Civil Engineering
Landscape Architecture
a: 249 Easy Main Street, Suite 100 Lexington, Ky 40507
o: (859) 254-6623
w: www.cmwaec.com

POAGE ENGINEERS & ASSOCIATES
880 Sparta Court, Suite 200 Lexington, KY 40504
Phone: (859) 255-9034 Fax: (859) 252-3130

STATE OF KENTUCKY
BRIAN D. SCOTT 21768
LICENSED PROFESSIONAL ENGINEER
5/31/2024

STRUCTURAL NOTES
Five Star #4460 - Hopkinsville
NEWCOMB OIL CO. LLC
3070 PEMBROOKE RD.
HOPKINSVILLE, KY 42240

CONSTRUCTION DOCUMENTS

Issue Date:	May 31, 2024
Drawn By:	HMM
Checked By:	BDS

Revisions:

Mark	Date

AHJ SEAL

Project Number
24086

S0.0

NOTE TO CONTRACTOR:

The contractor shall coordinate the Structural Drawings with the Architectural, Mechanical, and Electrical Drawings and make certain all pipes, sleeves, ducts, inserts, and openings are located and in place before each concrete pour.

The Contractor shall verify all dimensions shown on the Structural Drawings with dimensions shown on the Architectural Drawings. The Contractor shall check and approve, with reasonable promptness, shop drawings and schedules for coordination of details, sizes, fitting tolerances, and dimensions. The Contractor shall stamp or sign these drawings and schedules with his approval and then submit them to the Architect for review.

GENERAL

1. Reference to standards or specifications of technical societies, organizations, or associations, or to codes of local/state authorities, means the latest standard, specification, or code adopted by the date shown on the Drawings, unless specifically noted otherwise.

2. Material, workmanship, and design shall conform to the referenced Building Code.

3. For dimensions not shown in the Structural Drawings, see the Architectural Drawings.

4. Contractor responsibilities include, but are not limited to, the following:

   4.1 Coordinate the Structural Documents with the Architectural, Mechanical, Electrical, Plumbing, and Civil Documents. Architect/Structural Engineer shall be notified of any discrepancy or omission.

   4.2 The structure is stable only in its completed form. Temporary support required for stability during all intermediate stages of construction shall be designed, furnished, and installed by the Contractor.

   4.3 Contractor has sole responsibility for job site safety and complying with all health and safety precautions as required by any regulatory agency. In performing construction observation visits to the job site, for the Contractor's means, methods, sequences, techniques, or procedures in performing the work.

5. Contractor shall field verify all existing conditions, elevations, and site conditions prior to construction and fabrication. Contractor shall immediately notify Structural Engineer of any existing conditions that are in conflict with the Structural Documents.

CONCRETE

1. All concrete shall conform and be designed, mixed, placed, tested, and cured in accordance with the provisions of the ACI Manual of Concrete Practice, (current edition). Special care shall be taken in curing floors, stairs, walls, and other exposed surfaces in accordance with the specifications.

2. All concrete shall develop 4,000 PSI compressive strength in 28 days.

   A. W/C ratio, 0.45 for interior slabs and 0.46 for other concrete.

   B. Flyash substitution is only permitted in slabs with a 15% max. content. Flyash substitution is NOT permitted in foundations.

   C. Concrete structures and slabs exposed to freeze/thaw or subject to hydraulic pressure: air content 3% to 5%.

   D. Other concrete, air content 2% to 4%

   E. Slump limits (without a water reducer)
   - Ramps & sloping surfaces: no more than 3"
   - Reinforced foundations not less than 1" not more than 5"
   - Other concrete not less than 1" not more than 5"

3. Dropping the concrete in excess of 10 feet, depositing in a large quantity at any point and running or working it along the forms, or any method tending to cause segregation or separation of the aggregates will not be permitted.

REINFORCEMENT STEEL

1. Reinforcement steel shall have a minimum yield strength of 60,000 PSI and conform with material specifications for reinforcing bars, ASTM A615 thru A617; see manual of standard practice, Concrete Reinforcing Steel Institute.

2. Welded wire fabric shall conform to ASTM A185.

3. All rebars shall be securely tied and held in place with a minimum concrete protection cover to all steel as follows:

Walls, Columns, Beams, and Pilasters	1½"
Slabs	¾"
Footings	3"

4. Reinforcing steel bends shall be made as per diagram, and/or in accordance with A.C.I. Code.

5. Lap all splices as specifically called for, but at least 38 bar diameters for bars less than or equal to #6, and 48 bar diameters, for bars greater than #6, (always 12 in. minimum) unless noted otherwise. Lap all splices in masonry reinforcement a minimum of 48 bar diameters.

FOUNDATION DESIGN

1. Foundations were designed using an assumed maximum earth bearing pressure of 2,000 PSF. This verification shall be performed by Licensed Geotechnical Engineer.

GRADE SUPPORTED FLOOR SLABS

1. The following features are required as part of grade support slab construction:

   A. Keep the crushed stone moist, but not wet, immediately prior to slab concrete placement to minimize curling of the slab due to differential curing conditions between the top and bottom of the slab.

   B. The Special Inspector shall review the actual subgrade conditions prior to slab construction and to make recommendations for any unsuitable conditions encountered.

   C. Slab subgrade conditions are also considered earthwork areas; thus, the recommendations contained in the Earthwork section of the report apply.

SHALLOW FOUNDATIONS ON SOIL

1. Any soils can lose strength if they become wet, so the foundation sub grades must be protected from exposure to water. Foundation construction the following procedures.

   A. For soils that will remain exposed overnight or for an extended period of time, place a "lean" concrete mud–mat over the bearing areas. The concrete should be at least 4 inches thick. Flowable fill concrete or low–strength concrete is suitable for this cover, as conditions allow.

   B. Disturbed soil must be removed prior to foundation concrete placement.

   C. Foundation bearing conditions must be benched level.

   D. Areas loosened by excavation operations must be recompacted prior to reinforcing steel placement.

   E. Loose soil, debris, and excess surface water must be removed from the bearing surface prior to concrete placement.

   F. The Special Inspector shall observe all foundation excavations and provide recommendations for treatment of any unsuitable conditions encountered.

   G. The bearing conditions of foundation soils (stiff or better residual soil) shall be checked by means of portable dynamic cone penetration (DCP) testing at the direction of the special inspector.

STRUCTURAL STEEL

1. Steel Shapes

   1.1 W–Shapes: ASTM A992 (Grade 50)

   1.2 Angles, Channels, Plates, UNO: ASTM A36

   1.3 Square/Rectangular/Round Hollow Structural Sections (HSS): ASTM A500, Grade B

   1.4 Structural steel exposed to weather shall be galvanized.

2. Anchor Rods, Bolts, and Studs

   2.1 Anchor Rods: ASTM F1554, Grade 36. Headed Rods or threaded rods with plate washer and heavy hex nut.

   2.2 All bolts for structural steel joint fasteners shall be 3/4"DIA. high strength structural bolts, ASTM A325, Torque Control (Tension Set), unless otherwise noted.

3. Post–Installed Anchors: The procedure listed below are the design basis for these project. Installation of expansion anchors shall be in accordance with the ICC ES report and manufacturer's instructions for the particular anchor.

   3.1 Expansion Anchors: Hilti Kwik Bolt TZ (ICC–ES ESR–1917), Simpson Strong–Bolt 2 (ICC–ES ESR–3037), or Power–Stud+ SD2 (ICC_ES ESR–2502). Minimum embedment = 6 times anchor diameter, UNO.

   3.2 Adhesive Anchors

      3.2.1 All–thread steel anchor conforming to ASTM A307, Grade A or ASTM A36, zinc plated in accordance with ASTM B633.

      3.2.2 Adhesive conforming to Hilti Hit RE 500 SD (ICC–ES AC308), Simpson SET–XP Epoxy–Tie (ICC–ES ESR–2508), or Powers PE1000+ Epoxy Adhesive (ICC–ES ESR–2583), or Powers AC100+ Gold Adhesive (ICC_ES ESR–2582). Minimum embedment = 6 times anchor diameter, UNO.

      3.2.3 For hollow concrete masonry, use screen tube approved by manufacturer and an adhesive conforming to Simpson Strong–Tie SET (ICC–ES ESR–1772).

   3.3 Screw Anchors: Simpson Titan–HD (Concrete: ICC–ES ESR–2713; Grouted Masonry: ICC–ES ESR–1056) or Powers Wedge–Bolt+ (ICC–ES ESR–2526). Minimum Embedment = 6 times anchor diameter, UNO.

   3.4 Substitutions will only be considered for products have a code report recognizing the product for the appropriate application. The substitution request shall be accompanied by calculations that demonstrate the substituted product is capable of achieving the equivalent performance values of the design–basis product.

4. Structural steel shall be fabricated and erected according to the "Specification for Structural Steel Buildings" dated July 7, 2016 and the AISC "Code of Standard Practice for Steel Buildings and Bridges" dated June 15, 2016.

5. Connections shall be detailed based on the design information provided in the Structural Documents

   5.1 Standard Shear Connections: Details as bolted or welded double–angle, sible–plate, single–angle, or tee connections in accordance with the connection tables in the "Manual of Steel Construction", Thirteenth Edition.

      5.1.1 Shear connections not defined in the AISC Manual shall be designed by an Engineer licensed in the project state. This design service shall be included in the Contractor's scope of services. Shop drawings of such connections shall be sealed by the Engineer.

   5.2 Factored Design Forces/Reactions: As shown on the Structural Drawings or, if not shown, the factored design reaction shall be half of the "Maximum Total Uniform Load (LRFD)" tabulated in the "Manual of Steel Construction", Thirteenth Edition.

   5.3 Steel connections not specifically detailed in the Structural Drawings shall be designed by the Contractor. This design service shall be included in the Contractor's scope of services. Shop drawings of such connections shall be sealed by an Engineer licensed in the project state.

6. Shop Drawings: Submittal shall adequately depict structural members and connections.

7. All structural steel shall be fabricated and erected in accordance with the latest OSHA regulations regarding steel erection.

STEEL JOISTS:

1. All steel joists, joist girders, required accessories shall be designed, detailed & fabricated in accordance w/the Standard Specifications for Open Web Steel Joists According to the Steel Joist Institute. Current editions shall apply.

2. Provide joists fabricated in compliance w/the Steel Joist Institute (SJI) standard specifications, load tables & weight tables for: open web steel joists (K–series) and long span steel joists (LH–series).

3. Extent of work is indicated on the plans including basic layout & type of joists required. U.O.N. the following items are included: steel joists, joist extended ends, ceiling extrusions, extended bottom chorses used as struts, bridging & bridging anchor, joist bottom chord bracing, joist wall & beam anchors, headers, loose bearing plates & anchor bolts for placement.

4. Joists shall be designed by joist manufacturer to insure that chord members are sufficient to withstand forces indicated on the drawings. All joists shall be reviewed & sealed by a licensed engineer registered in the state of Kentucky. Joists manufacturer shall design connections on shop drawings. Connection design shall be coordinated w/the structural steel fabricator. All welds or bolts required shall be clearly indicated.

5. Design & fabricate steel joists in accordance w/SJI specifications, including headers & other support framing. Verify drawing dimensions & field conditions prior to fabrication.

6. Provide horizontal or diagonal type bridging for joists, complying w/SJI specifications. Provide bridging anchors for ends of bridging lines terminating at walls or beams.

7. Provide end anchorages to secure joists to adjacent construction, complying w/SJI specifications, U.O.N.

8. Camber joists tom allow for dead–load deflection as provided in the SJI "standard specifications".

9. Remove loose scale, heavy rust, & other foreign materials from the fabricated joists & accessories before application of shop paint. Apply one coat shop coat of primer to steel joists & accessories, by spray. or other method which complies w/steel structures painting council specification, sspc no. 15.

GENERAL

1. Use the structural drawings with the architectural, mechanical, plumbing, electrical, and shop drawings.

2. Contractor is responsible for obtaining all contract documents and latest addenda, as well as, submitting to all subcontractors and suppliers prior to submitting shop drawings.

3. Do not scale drawings or auto–dimension electronic files. notify architect and engineer of any discrepancies in writing prior to fabrication or construction.

4. Compare all contract drawings and report any discrepancies between disciplines, and within a given discipline, to the architect and engineer prior to fabrication and erection.

5. If a conflict exists among the structural drawings, general notes, the strictest requirements, as indicated by the engineer, governs.

6. Coordinate all elevations and dimensions, including but not limited to, openings in walls and in roof and floor systems, with the architectural, plumbing, electrical, and mechanical plans.

7. Verify all dimensions, elevations, and any other existing conditions. Notify the architect and engineer of discrepancies before proceeding with the affected part of the work. During the construction process, it is the contractor's responsibility to maintain the integrity of the existing structure and to protect from damage any portions that remain. The shoring and bracing shown (if any) is a partial and schematic representation. Determine the erection procedure to ensure the stability and safety of the building and its components during construction.

8. The completed lateral–force resisting systems (lfrs), including the diaphragms, are required to resist lateral loads and provide stability under gravity loads. During construction, the contractor is responsible for all bracing during construction to maintain the stability and safety of all structural elements until the lateral–load resisting or stability–providing system is completely installed and the structure is completely tied together.

9. Unless noted otherwise, details shown are typical for all similar conditions.

10. The contractor is solely responsible for all construction means and methods, as well as safety precautions and programs.

11. Poage Engineers & Associates, Inc. is not responsible for acts or omission of the contractor, nor failure to perform work in accordance with the contract documents.

12. Periodic site observation by Poage Engineers & Associates, Inc. is for determining if the work is proceeding in accordance with the structural contract documents. Structural observations are not intended as quality control (contractor's responsibility), quality assurance (special inspector's responsibility), nor to confirm the quality or quantity of the work.

13. The building owner is responsible for periodic maintenance to ensure structural integrity. Maintenance includes, but is not limited to, steel/concrete coatings, sealants, caulked joints, expansion joints, control joints, spalls and cracks in concrete, and cleaning of exposed structural elements.

DESIGN CRITERIA

A. Structural drawings are based on the requirements of the 2018 Kentucky Building Code (IBC 2015) and the referenced sections within.

B. DEAD LOADS:

1. Slab On Grade:	(70 PSF total)
a. Structure	50 PSF
b. Miscellaneous	15 PSF
c. Finishes	5 PSF
2. Roof System:	(25 PSF total)
a. Structure	8 PSF
b. MEP	7 PSF
c. Insulation and Roofing	10 PSF

C. LIVE LOADS:
   1. Live loads are based on the more restrictive of the uniform load or the concentrated load listed acting over a 6.25 square foot area. Live loads have been reduced as prescribed in the aforementioned building code.

LIVE LOADS		
Category	Uniform Load (PSF)	Concentrated Load (LBS)
Dining Rooms & Restaurants	= 100psf	
Kitchen	= 100psf	
Roofs: All roof surfaces subject to workers	= 300lbs	
Roofs: Ordinary Roof	= 20psf	

D. DESIGN SNOW LOADS:

1. Ground Snow Load:	P_G	15 PSF
2. Flat Roof Snow Load:	P_F	15 PSF
3. Snow Exposure Factor:	C_E	1.0
4. Snow Thermal Factor:	C_T	1.0
5. Slope Factor	C_S	1.0
6. Snow Importance Factor:	I_S	1.0
7. Drift Surcharge:	P_d	SEE TABLE
8. Snow Drift Width:	w	SEE TABLE
9. Rain–On–Snow Surcharge:		5 PSF

SNOW DRIFT DIAGRAM		
Balanced Snow Load: 15 PSF		
Drift Area	Drift Surcharge	Drift Width
A	29psf to 0–psf–3"	
B	24psf to 0–psf5'–10"	

E. DESIGN WIND LOADS:

1. Basic Wind Speed:	V_{ULT}	115 MPH (3–SEC GUST)
2. Basic Wind Speed:	V_{ASD}	90 MPH (3–SEC GUST)
3. Risk Category:		II
4. Wind Exposure:		B
5. Internal Pressure Coeff:	GC_{pi}	±0.18
6. Components & cladding wind pressures (Ultimate): Width of Zone, a = ____FT		

F. SEISMIC LOADS:

1. Risk Category:		II
2. Seismic Importance Factor:	I_E	1.0
3. Short period spectral response acceleration:	S_S	0.384
4. 1–SEC period spectral response acceleration:	S_1	0.161
5. Site Class:		D
6. Short period design spectral response acceleration:	S_{DS}	0.382
7. 1–SEC period design spectral response acceleration:	S_{D1}	0.231
8. SEISMIC DESIGN CATEGORY:		D
9. Basic Seismic–Force Resisting System: Light–frame (wood) load–bearing walls sheathed with wood structural panels rated for shear resistance		

Design Base Shear: V 0.0955 x W
Seismic Response Coefficient: C_S 0.0955
Response Modification Factor: R 4
Analysis Procedure: Equivalent Lateral Force

G. Verify all mechanical equipment weights, locations and associated openings with the mechanical contractor and submit information prior to fabrication of the supporting structure. Notify the engineer if the actual weight exceeds the weight indicated on the structural drawings.

Foundations

1. Foundation design is based on an assumed bearing capacity listed below and should be field verified.

2. Foundations have been designed using a net soil bearing pressure of 2,000 psf.

3. Review the geotechnical report and adhere to all recommendations within, including cut, subgrade preparation, fill, etc.

4. All soils work, including backfill of utility trenches and the verification of bearing capacity must be under the direction of a qualified geotechnical engineer. Proximity of utility trenches to building foundation system must be as approved by the geotechnical engineer to ensure integrity of the bearing soils.

5. All foundations bear on undisturbed earth or engineered fill at elevations shown on plans & details. Coordinate final top of footing elevations w/the architectural elevations, mep drawings & civil grading plans prior to placement. Foundation steps indicated are approximate, unless noted otherwise, & must be field coordinated. The bottom of exterior foundation elevations must be below the frost depth elevation 24" measured from exterior finished grade.

6. Bear floor slabs on 6" minimum drainage course (compacted stone) unless noted otherwise in the geotechnical report or drawings. Place the vapor retarder between the drainage course and the slab. Vapor retarder is astm e1745, class b, 15 mil unless noted otherwise. Place, protect and repair per astm e1643 and manufacturer's instructions.

7. Do not install foundation concrete until all foundation work has been coordinated with underground utilities. Notify the engineer of all conflicts between foundations and utilities.

8. All foundations, or portions thereof below grade, may be earth formed by neat excavations. Do not place foundations, slabs, or other concrete on frozen subgrade or in standing water.

9. Center all foundations on walls and/or columns, unless noted otherwise.

10. Determine the extent of construction dewatering required for the excavations. Submit the proposed construction dewatering plan to the geotechnical engineer for review prior to excavation.

11. Shallow rock may be encountered during footing excavation. If so over excavate a minimum of 24" as recommended in geotechnical report.

CONCRETE

1. Concrete must conform to the concrete properties specified in the concrete properties table.

2. Concrete must have allowable unit shrinkage of 0.045% at 28 days. (see astm c157)

3. Slabs to receive moisture sensitive floor coverings must have maximum water/cementitious material ratio of 0.45.

4. Concrete construction must conform to the current "aci manual of concrete practice".

5. Concrete materials must conform to the following specifications:
   a. Portland cement: astm c150, type i or ii
   b. Aggregate (normal weight): astm c33

6. All reinforcement must conform to the following specifications:
   a. All reinforcing, uno: astm a615 grade 60
   b. Welded wire reinforcement (wwr)
      - Smooth wire: astm a1064 (65 ksi)
      - Deformed wire: astm a1064 (70 ksi)

7. Polypropylene fibrillated fiber may be used to substitute wwr in slabs on grade when added to concrete mix according to manufacturer's instructions and recommended dosages.

8. Reinforcement detailing:
   a. Detail and place reinforcement in accordance with aci 315.
   b. Development and splice lengths are in tension unless noted otherwise. Refer to the reinforcing bar lap length schedule on the typical detail sheets.
   c. Lap wwr one crosswire spacing plus 2".
   d. Install corner bars at all footings and wall intersections to match horizontal reinforcing size and spacing. At intersections of continuous spread footings, extend all bars to far side of intersecting footing.
   e. Install and secure reinforcement to prevent displacement during concrete placement. Provide the following concrete cover for reinforcing, unless specifically noted otherwise:
      - Cast against earth: 3"
      - Exposed to earth/weather: #6 thru #18: 2"
      - Exposed to earth/weather: #5 & smaller: 1½"

9. Install dowels to match reinforcement size and spacing indicated, unless noted otherwise.

10. Cast foundation walls, grade beams and footings in alternate panels not to exceed 60'–0" in length. Install shear keys at each construction joint and located at 1/3 points of spans.

11. Do not use horizontal construction joints in concrete pours unless shown on the drawings. The engineer must approve all deviations or additional joints in writing.

12. Cast slabs and beams/joists monolithically unless noted otherwise.

13. Chamfer all permanently exposed concrete edges 3/4 inch, unless noted otherwise.

14. Reference architectural and mechanical drawings for locations of openings and sleeves in concrete walls and supported floors. Spread reinforcement at openings and sleeves unless otherwise indicated. Do not cut reinforcement.

15. Slope concrete slabs to floor drains shown on mechanical, plumbing, civil and architectural drawings.

16. Bond new concrete to hardened concrete with a structural adhesive bonding agent per astm c1059. Install per the manufacturer's instructions.

17. No holes or openings through foundation walls and/or footings without engineer's approval.

18. Do not embed aluminum in concrete.

CONCRETE PROPERTIES

Usage	Strength (PSI)	Type	Durability Classification
All Concrete not otherwise specified	3500psi	NWT	F0, S0, W0, C1
Footings	3500psi	NWT	F0, S0, W0, C1
Slab–On–Grade Interior	3500psi	NWT	F0, S0, W0, C0

Concrete properties table notes:
1. Minimum strength and maximum density measured at 28 days.
2. Nwt = normal weight concrete
3. Durability classification indicates concrete requirements by exposure class, refer to table 19.3.2.1 of aci 318.

STRUCTURAL STEEL

1. Hot rolled steel bars, plates, shapes and sheet piling must be new steel conforming to astm a6. Fabricate and install steel in accordance with aisc 303 "code of standard practice for steel buildings and bridges" and aisc 360 "specification for structural steel buildings".

2. Structural steel is as follows, unless noted otherwise:
   a. Wide flange and wt–shapes astm a992 f_y = 50 ksi
   b. Rectangular and square hss astm a500, grade bf_y = 46 ksi
   c. All other structural steel astm a36 f_y = 36 ksi
   d. Anchor rods astm f1554, grade 36
   e. Astm a572 grade 50 is acceptable as a substitute for a992.

3. Center columns and beams on grid lines unless noted otherwise.

4. Steel connections have been designed in accordance with the referenced design criteria.

5. Bolt connections (unless otherwise noted or required):
   a. Bolts – astm f3125, grade a325
   b. Washers – astm f436, type 1
   c. Nuts – astm a563, grade dh

6. Connect a minimum of one–half (1/2) the depth of the member

7. Unless noted otherwise, bolts may be tightened to the "snug tight" condition in lieu of pretensioning, use bearing connections with threads included for all other connections.

8. Weld connections (unless noted otherwise):
   a. Welding in accordance with aws d1.1, "structural welding code – steel".
   b. Use e70xx (smaw), f7xx–exxx (saw), er70s–x (gmaw), or e7xt–x (fcaw) electrodes for welding, unless noted otherwise.

9. Show all field welds required on erection drawings.

10. Use continuous ¼" fillet welds unless noted otherwise.

11. Cuts indicated on the drawings, or as required for other trades, must be made in the shop and shown on the shop drawings. Field performed holes or cuts are not permitted without engineer approval.

12. Install nonmetalltic shrinkage–resistant grout below base plates, in accordance with astm c1107 and a minimum strength of 6,000 psi.

13. Fabricate structural steel with one coat of shop primer except the following members: galvanized surfaces, slip–critical surfaces, surfaces to be field welded, surfaces to receive fire proofing, or unless noted otherwise. Coordinate areas to be fireproofed with architectural drawings prior to fabrication.

14. Galvanized structural steel: astm a123 or astm a153. Galvanize after fabrication. Galvanize all exterior exposed steel, unless noted otherwise. Repair damaged galvanized coatings in accordance with astm a780.

15. Unless noted otherwise, the top of all steel columns are fabricated with a steel cap plate – minimum cap plate dimensions match column width and depth, and minimum thickness of cap plate equals column web thickness (¼" min).

16. Coordinate the exact location and size of all openings for mechanical equipment with the mechanical contractor prior to fabrication.

17. Reference the architectural, civil, mechanical, plumbing and electrical drawings for additional steel (if any) not indicated on the structural drawings.

ROUGH CARPENTRY

1. General Lumber:
   A. Grading per doc ps 20 and applicable grading agency rules. Factory mark each piece with grading Agency grade stamp.
   B. Maximum moisture content: 19%
   C. Protect materials from weather
   D. Sort and select lumber so natural characteristics do not interfere with installation or fastening.
   E. Pass plumbing and conduit through holes, not notches, in studs, sills and plates. Center holes in the Member depth. Use galvanized nail stoppers (16 gage min.) On both faces of bored members in according with the governing plumbing/electrical code.

2. Preservative–Treated (PT):
   A. Preservative treatment process: AWPA U1
      - Category uc2 for interior construction not in contact with ground
      - Category uc3b for exterior construction not in contact with ground
      - Category uc4a for items in contact with ground
      - Chemicals used must be acceptable to authorities having jurisdiction and not contain arsenic, chromium, nor ammonia–cal copper zinc arsenate (ACZA). Do not use inorganic boron (SBX) for sill Plates.
   B. Kiln–dry after treatment to a maximum moisture content of 19 percent.
   C. Mark lumber with treatment quality mark of an inspection agency approved by the ALSC board.
   D. Unless noted otherwise, install pt lumber as follows:
      - Exterior locations.
      - Wood members in contact with masonry, mortar, grout or concrete
      - Wood framing members less than 18 inches above ground in crawlspaces or unexcavated areas.

3. Dimensional Lumber:
   A. Unless noted otherwise: southern pine no.2 or better, spib
   B. Exterior walls: southern pine no.2 or better, spib; or spruce pine fir, no.1 or better, nlga

4. Fasteners:
   A. Nails, brads, and staples: astm f1667
   B. Fasteners used in preservative–treated or fire–treated lumber are galvanized to astm standard b695 – Class 55, or a153 – class d.
   C. Fasteners used in proximity to saltwater spray are manufactured from type 316 stainless steel or hot dip Galvanized.
   D. As a minimum, fasten all wood framing to comply with the "fastening schedule" of the referenced building Code and the icc–es evaluation report for fasteners.
   E. Use steel common nails unless noted otherwise.
   F. Stagger fasteners to prevent splitting, including parallel to grain splitting.
   G. Fasten multi–ply members together using (3) rows of 16d nails at 12 inches oc, unless noted otherwise.

5. Connectors:
   A. Install connectors complying with manufacturer's written instructions. Install fasteners through each Fastener hole, unless noted otherwise.
   B. Connectors indicated are manufactured by simpson strong–tie, inc. Connectors by other manufacturers May be used if the load capacity is equal to or greater than the connector specified. Use manufacturer's Recommended fasteners, unless noted otherwise.
   C. Conrors have a minimum corrosion protection of g90 galvanization complying with astm a653.
   D. Connectors in contact with pressure treated or fire treated lumber are manufactured from simpson Zmax (g185 galvanized) steel complying with astm a653.
   E. Connectors in proximity to saltwater spray are manufactured from type 316 stainless steel or hot dip Galvanized to astm standard a123 – class c.

6. Erection Tolerances:
   A. Framing members covered by finishes such as wallboard, plaster or ceramic tile set in a mortar setting Bed, must be within the following limits:
      - Layout of walls and partitions: 1/4 inch from the intended position
      - Plates and runners: 1/4 inch in 8 feet from a straight line
      - Studs: 1/4 inch in 8 feet out of plumb, not cumulative
      - Face of framing members: 1/4 inch in 8 feet from a true plane
   B. Framing members covered by ceramic tile set in dry–set mortar, latex–portland cement mortar or organic Adhesive must be within the following limits:
      - Layout of walls and partitions: 1/4 inch from the intended position
      - Plates and runners: 1/8 inch in 8 feet from a straight line
      - Studs: 1/8 inch in 8 feet out of plumb, not cumulative
      - Face of framing members: 1/8 inch in 8 feet from a true plane

7. Wall Construction:
   A. Unless noted otherwise use single bottom plate and double top plates using 2x members with widths equal To the wall studs. Fasten plates to supporting construction. Splice top plates within the center third of The total wall length with a 4 foot minimum lap, unless noted otherwise.
   B. Exterior walls: 2x6 studs at 16 inches o.c. max spacing, unless noted otherwise
   C. Install horizontal blocking at wall mid height. Blocking is 2x members with widths equal to the studs.
   D. Construct corners and intersections with three or more studs.
   E. Frame wall openings with multiple jambs studs and headers as indicated. Install header members with Thickness equal to width of the wall studs.

WOOD SHEATHING

1. General
   a. Wood sheathing refers to wood structural panels, of either plywood or oriented strand board (osb).
   b. Wood sheathing is apa–rated sheathing, complying with product standard doc ps1 or doc ps2. Wood sheathing manufacturer must be a member of the american plywood association (apa).
   c. Protect wood sheathing from weather and provide for air circulation around stacks and under coverings.
   d. Panels must have factory marks indicating compliance with applicable standards.
   e. Thickness not less than indicated, and as required to comply with specified requirements.
   f. Install sheathing with the strength direction (typically long dimension) perpendicular to framing and with end joints staggered.
   g. Do not use materials with defects impairing the quality of sheathing or pieces too small to use with minimum number of joints. Layout panels to span between at least three support members.
   h. Coordinate sheathing installation with flashing and joint–sealant installation so materials are installed in a sequence and manner preventing exterior moisture from passing through the completed assembly.
   i. Do not bridge building expansion joints.
   j. Where either 2 inch or 2 1/2 inch fastener spacings are specified to 2 inch or less framing members, the framing member at adjoining panel edges must be 2 1/2 inch wide or greater. Stagger fasteners at panel edges in two lines.

2. Wall Sheathing
   a. Span rating: not less than 32/16
   b. Nominal thickness: not less than 1/2 inch
   c. Exposure and durability classification: exposure 1
   d. Fastening method, unless noted otherwise:
   e. Fasteners: 10d ring shank nails
   f. Boundary edge spacing: 6 inches oc
   g. Panel edge spacing: 6 inches oc
   h. Field spacing: 12 inches oc

3. Reference shearwall details for shearwall sheathing fastening, blocking and other details.

4. Roof Sheathing
   a. Span rating: not less than 40/20
   b. Nominal thickness: not less than 5/8 inch
   c. Exposure and durability classification: exposure 1
   d. Fastening method, unless noted otherwise:
   e. Fasteners: 8d ring shank nails
   f. Boundary edge spacing: 4 inches oc
   g. Panel edge spacing: 6 inches oc
   h. Field spacing: 12 inches oc

5. Unless noted otherwise, install blocking at all sheathing edges and fasten sheathing edges to blocking according to panel edge spacing.

6. Fasteners
   a. As a minimum, fastening to comply with the "fastening schedule" of the referenced building code and the icc–es evaluation report for fasteners.
   b. Use steel common nails into wood framing and screws into cold–formed metal framing, unless noted otherwise.
   c. Nails, brads, and staples: astm f1667.
   d. Screws for fastening sheathing to wood framing: astm c1002.
   e. Screws for fastening sheathing to cold–formed metal framing: astm c954, except with wafer heads (min head dia=0.333 inches) and reamer wings, length as recommended by screw manufacturer.
   f. For roof, parapet, and wall sheathing, use fasteners with hot–dip zinc coating complying with astm a153 or type 304 stainless steel.
   g. For roof, parapet, and wall sheathing with organic–polymer or other corrosion–protection coatings, use fasteners with a salt–spray resistance of more than 800 hours according to astm b117.

CMW The Shape of Ideas

Architecture
Civil Engineering
Landscape Architecture
a: 249 Easy Main Street, Suite 100
Lexington, Ky 40507
o: (859) 254-6623
w: www.cmwaec.com

POAGE ENGINEERS & ASSOCIATES
880 Sparta Court, Suite 200
Lexington, KY 40504
Phone: (859) 255-9034
Fax: (859) 252-3130

STATE OF KENTUCKY
BRIAN D. SCOTT 21768
LICENSED PROFESSIONAL ENGINEER
5/31/2024

STRUCTURAL NOTES

Five Star #4460 - Hopkinsville
NEWCOMB OIL CO. LLC
3070 PEMBROOKE RD.
HOPKINSVILLE, KY 42240

CONSTRUCTION DOCUMENTS

Issue Date:	May 31, 2024
Drawn By:	HMM
Checked By:	BDS

Revisions:

Mark	Date

AHJ SEAL

Project Number
24086

S0.1

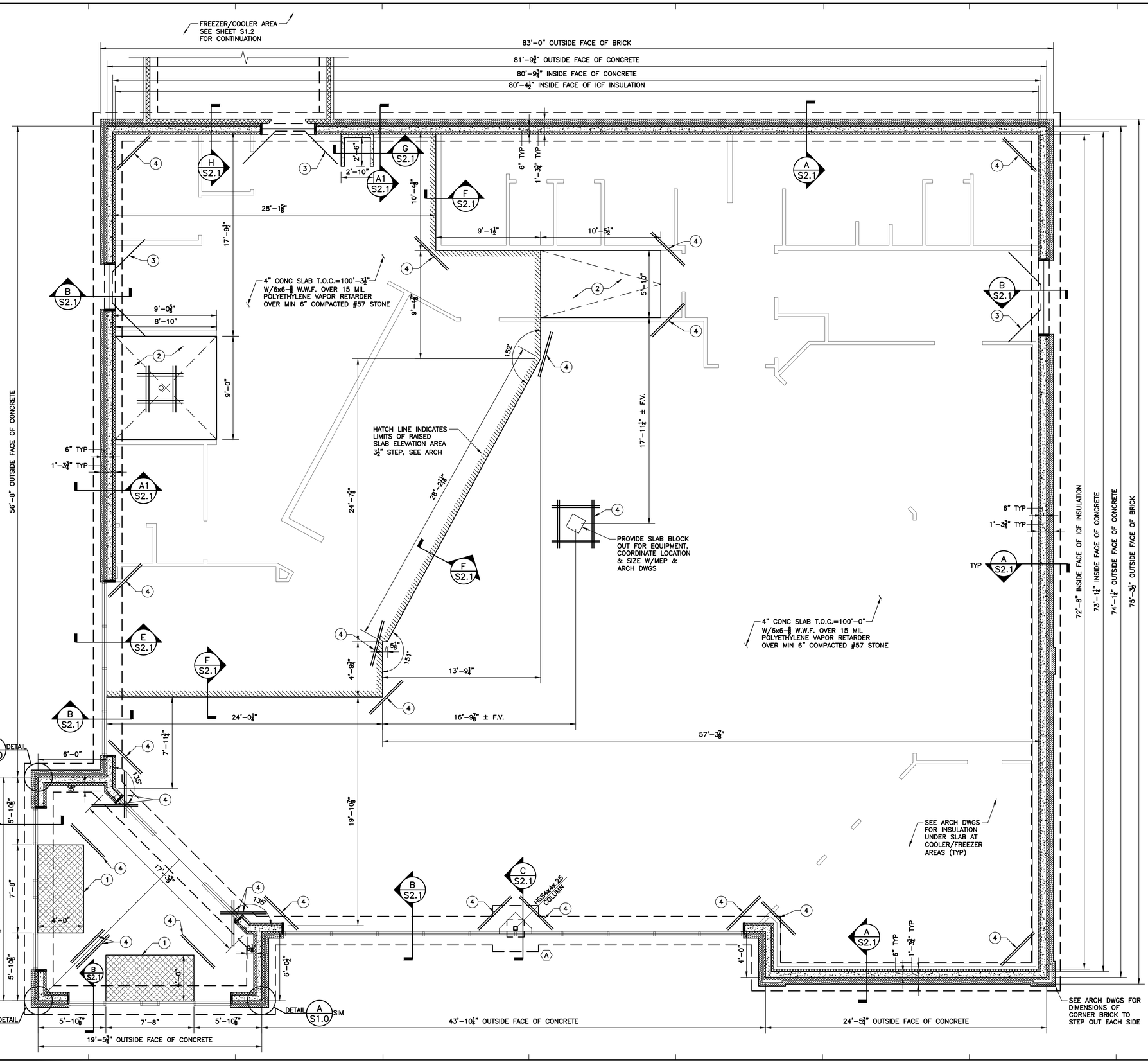

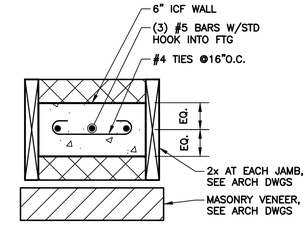

DETAIL B S1.0

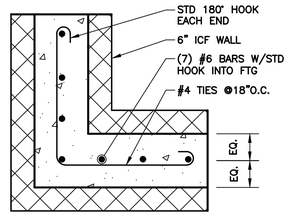

DETAIL A S1.0

NOTES:

1. RECESS T.O. SLAB 8" DEEP FOR FLOOR MAT, SEE ARCH DWGS
2. SLOPED SLAB AREA, SEE ARCH DWGS FOR DIMS, PROVIDE CONTROL JOINT AT EACH SIDE
3. PROVIDE (2) #4 BARS CENTERED IN SLAB AT ALL DOOR OPENINGS, TYP U.N.O.
4. PROVIDE (2) #4 BARS x48" LONG AT ALL SLAB RE-ENTRANT CORNERS, TYP U.N.O.

NOTES:

1. DATUM ELEVATION TOP OF CONCRETE (T.O.C.) = 100'-0" ASSUMED.
2. CONTRACTOR SHALL COORDINATE FLOOR DRAINS & ELECTRICAL CONDUITS WITH MECHANICAL, ELECTRICAL & PLUMBING DWGS NOT SHOWN ON THE STRUCTURAL DWGS.
3. ALL DIMENSIONS SHOWN ARE TO FACE OF CONCRETE FOUNDATION WALL UNLESS NOTED OTHERWISE (U.N.O.)
4. REFER TO ARCHITECTURAL DWGS FOR LOCATIONS OF ALL INTERIOR NONLOAD-BEARING WALLS NOT LOCATED ON STRUCTURAL DWGS.
5. REFER TO GEOTECH REPORT FOR ADDITIONAL RECOMMENDATIONS.
6. SAW CONTROL JOINTS IN THE CONCRETE SLAB IMMEDIATELY AFTER SET UP. REFER TO DWGS, BUT MAXIMUM SPACING SHALL BE 16'-0" IN EITHER DIRECTION (TYPICAL U.N.O.) IN LIEU OF CONTROL JOINTS PROVIDE FIBER MESH IN ADDITION TO W.W.F. THAT IS CURRENTLY SHOWN.

FOOTING SCHEDULE

MARK	FOOTING SIZE	REINFORCING STEEL
A	4'-0"x4'-0"x12"	(4) #5 BARS EACH WAY

FOUNDATION PLAN

CMW The Shape of Ideas
Architecture
Civil Engineering
Landscape Architecture
a: 249 Easy Main Street, Suite 100 Lexington, Ky 40507
o: (859) 254-6623
w: www.cmwaec.com

POAGE ENGINEERS & ASSOCIATES
880 Sparta Court, Suite 200
Lexington, KY 40504
Phone: (859) 255-9034
Fax: (859) 252-3130

STATE OF KENTUCKY
BRIAN D. SCOTT 21768
LICENSED PROFESSIONAL ENGINEER
5/31/2024

FOUNDATION PLAN
Five Star #4460 - Hopkinsville
NEWCOMB OIL CO. LLC
3070 PEMBROOKE RD.
HOPKINSVILLE, KY 42240

CONSTRUCTION DOCUMENTS

Issue Date:	May 31, 2024
Drawn By:	HMM
Checked By:	BDS
Revisions:	

Mark	Date

AHJ SEAL

Project Number
24086

S1.0

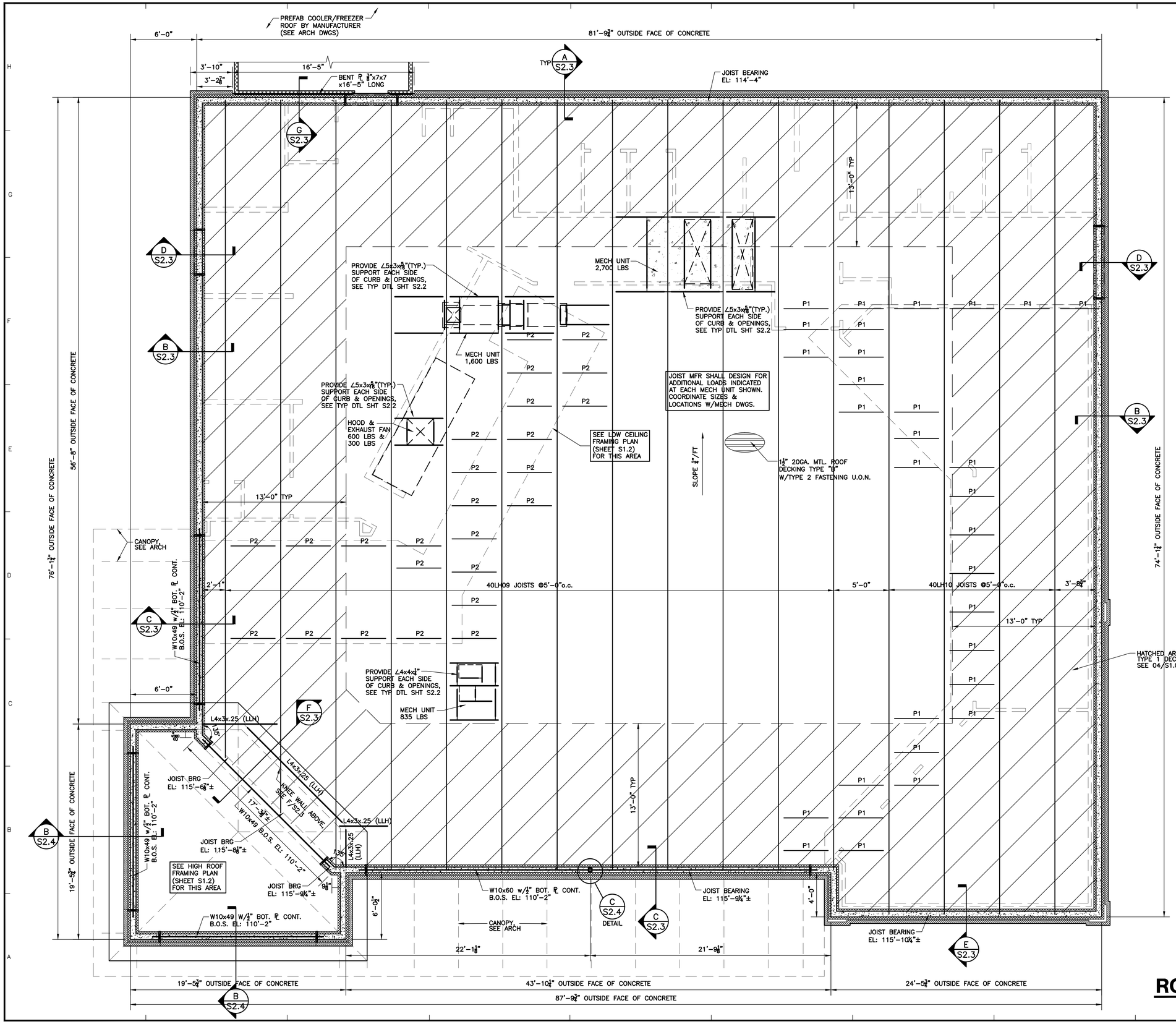

NOTES:

1. MANUFACTURER SHALL PROVIDE BRIDGING PER SJI REQUIREMENTS.
2. P1 ON THE PLAN INDICATES A 250 LBS POINT LOAD FROM PARTITION WALLS ABOVE THE COOLER WALLS TO BE SUSPENDED FROM THE BOTTOM CHORD OF THE JOISTS. WHERE HANGERS DO NOT LINE UP DIRECTLY WITH JOIST PROVIDE P5500 UNI-STRUT BETWEEN JOIST SIMILAR TO TYPICAL JOIST BRIDGING DETAIL
3. P2 ON THE PLAN INDICATES A 150 LBS LOAD FROM CEILING FRAMING BELOW TO BE SUSPENDED FROM THE BOTTOM CHORD OF THE JOISTS. SEE LOW CEILING FRAMING PLAN FOR ADDITIONAL INFORMATION
4. METAL ROOF DECK FASTENING, USE #12 TEK SCREWS 36/7 SCREW FASTENER PATTERN AT EACH JOIST. 5/8" PUDDLE WELDS CAN BE SUBSTITUTED FOR #12 TEK SCREWS AS LONG AS SAME PATTERN FOR EACH FASTEN TYPE IS USED

ROOF FRAMING PLAN

CMW The Shape of Ideas

Architecture
Civil Engineering
Landscape Architecture
a: 249 Easy Main Street, Suite 100 Lexington, Ky 40507
o: (859) 254-6623
w: www.cmwaec.com

POAGE ENGINEERS & ASSOCIATES
880 Sparta Court, Suite 200
Lexington, KY 40504
Phone: (859) 255-9034
Fax: (859) 252-3130

STATE OF KENTUCKY
BRIAN D. SCOTT
21768
LICENSED PROFESSIONAL ENGINEER
5/31/2024

LOW ROOF FRAMING PLAN

Five Star #4460 - Hopkinsville
NEWCOMB OIL CO. LLC
3070 PEMBROOKE RD.
HOPKINSVILLE, KY 42240

CONSTRUCTION DOCUMENTS

Issue Date:	May 31, 2024
Drawn By:	HMM
Checked By:	BDS
Revisions:	

Mark	Date

AHJ SEAL

Project Number **24086**

S1.1

P:\POAGE\24086\05.31.2024\HMM

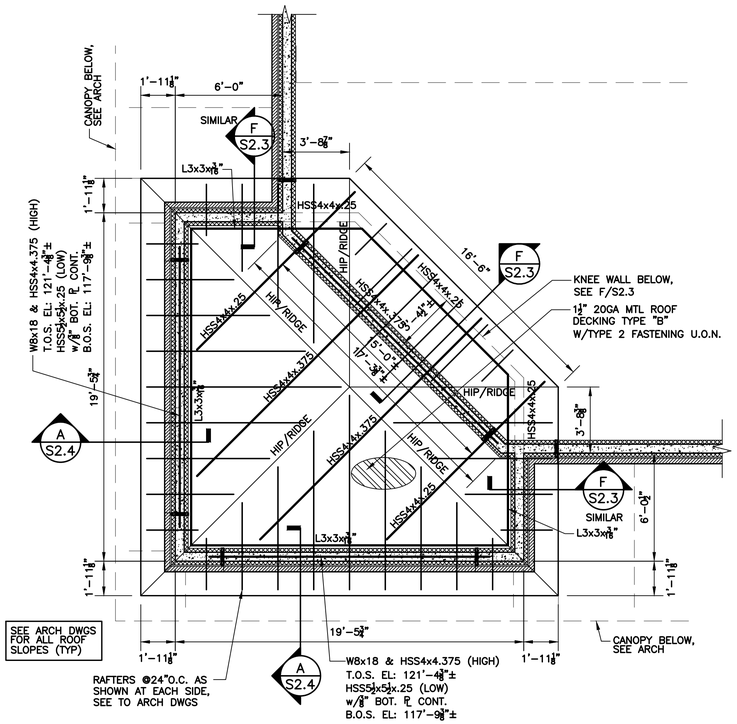

HIGH ROOF FRAMING PLAN

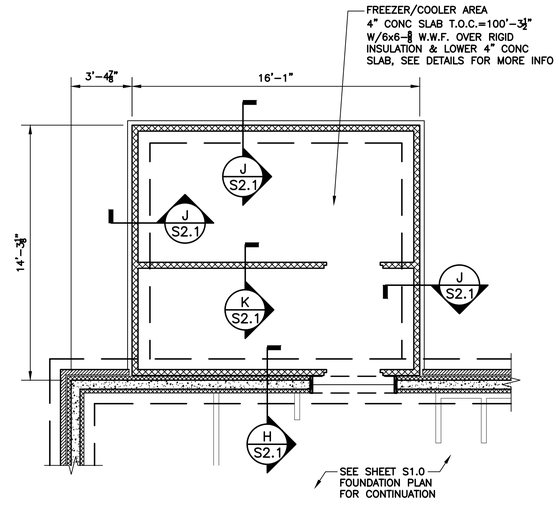

FREEZER/COOLER FOUNDATION PLAN

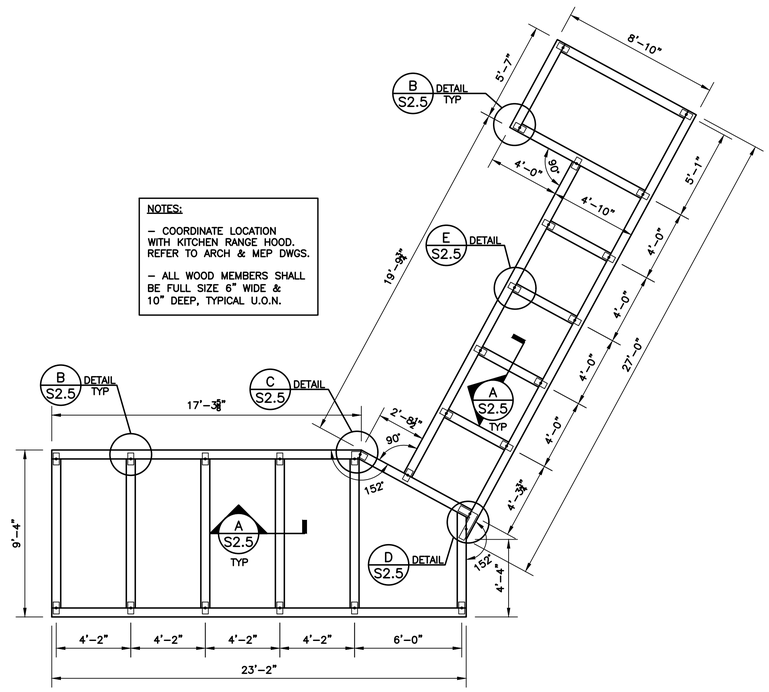

LOW CEILING FRAMING PLAN

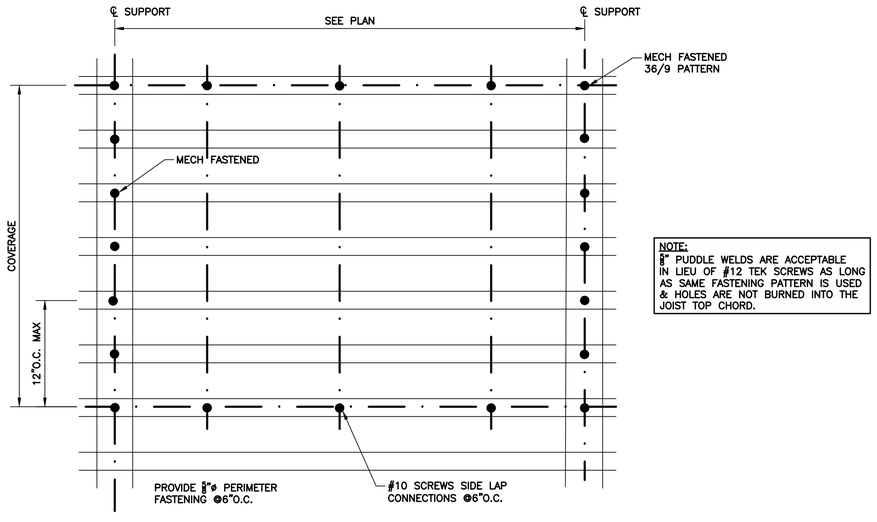

NOTE:
⅝" PUDDLE WELDS ARE ACCEPTABLE IN LIEU OF #12 TEK SCREWS AS LONG AS SAME FASTENING PATTERN IS USED & HOLES ARE NOT BURNED INTO THE JOIST TOP CHORD.

METAL ROOF DECK FASTENING PATTERN TYPE 1 (SHADED AREA)

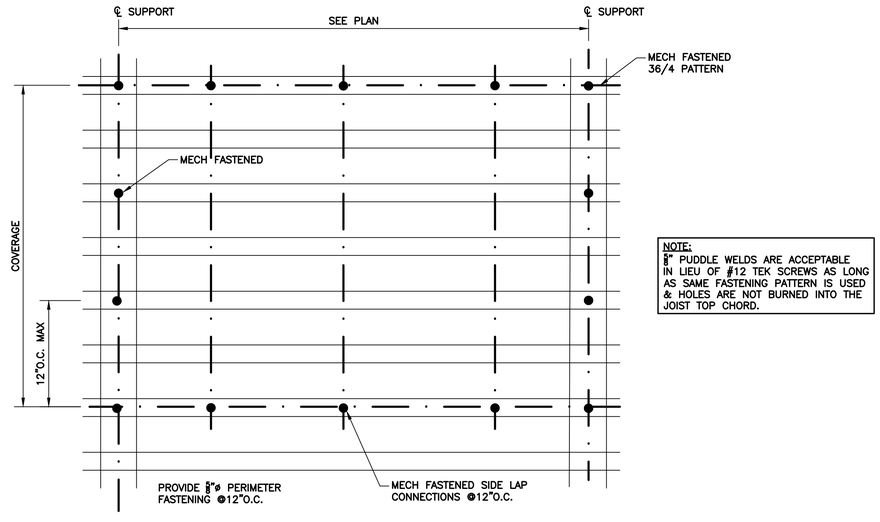

NOTE:
⅝" PUDDLE WELDS ARE ACCEPTABLE IN LIEU OF #12 TEK SCREWS AS LONG AS SAME FASTENING PATTERN IS USED & HOLES ARE NOT BURNED INTO THE JOIST TOP CHORD.

METAL ROOF DECK FASTENING PATTERN TYPE 2

CMW The Shape of Ideas
Architecture
Civil Engineering
Landscape Architecture
a: 249 Easy Main Street, Suite 100 Lexington, Ky 40507
o: (859) 254-6623
w: www.cmwaec.com

POAGE ENGINEERS & ASSOCIATES
880 Sparta Court, Suite 200 Lexington, KY 40504 Phone: (859) 255-9034 Fax: (859) 252-3130

STATE OF KENTUCKY BRIAN D. SCOTT 21768 LICENSED PROFESSIONAL ENGINEER 5/31/2024

HIGH ROOF & CEILING FRAMING PLANS

Five Star #4460 - Hopkinsville
NEWCOMB OIL CO. LLC
3070 PEMBROOKE RD.
HOPKINSVILLE, KY 42240

CONSTRUCTION DOCUMENTS

Issue Date:	May 31, 2024
Drawn By:	HMM
Checked By:	BDS

Revisions:

Mark	Date

AHJ SEAL

Project Number
24086

S1.2

POAGE/24086/05.31.2024/HMM

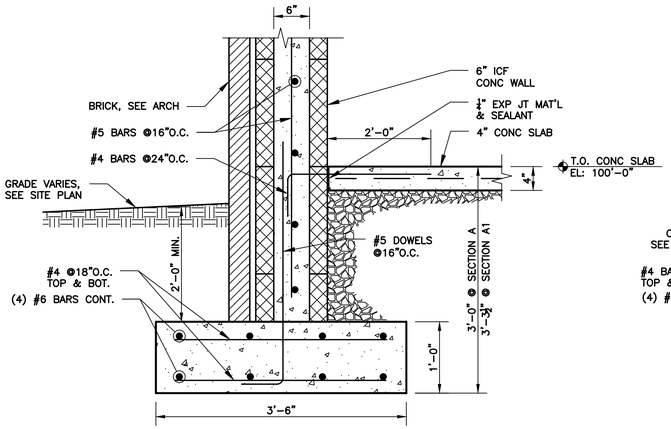

SECTION A S2.1 / A1 S2.1

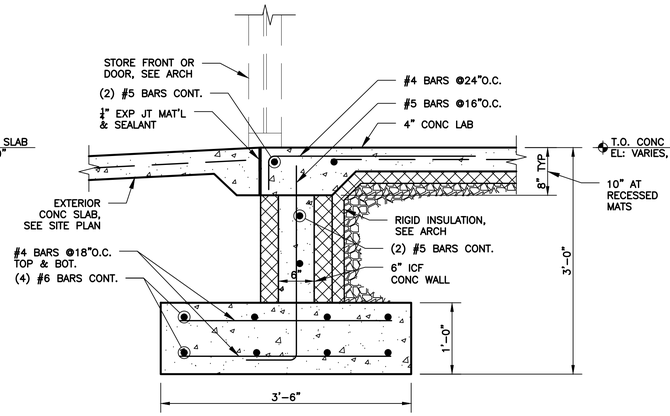

SECTION B S2.1

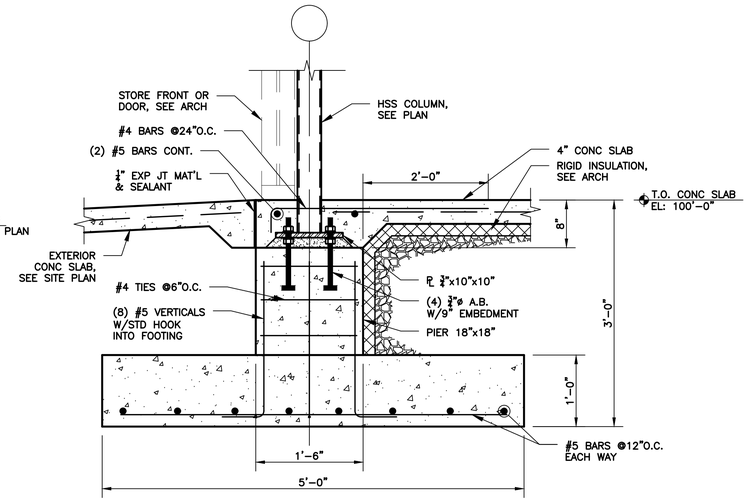

SECTION C S2.1

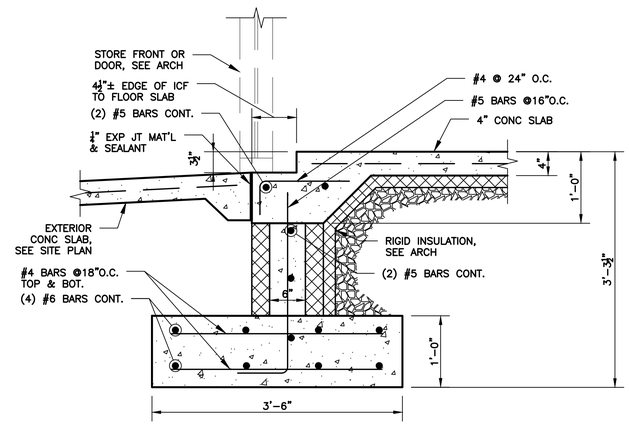

SECTION E S2.1

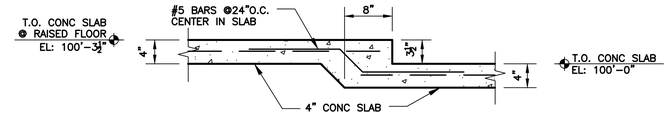

SECTION F S2.1

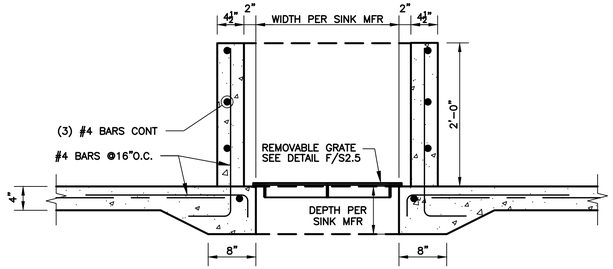

SECTION G S2.1

NOT USED D S2.1

(SEE B/S2.1)

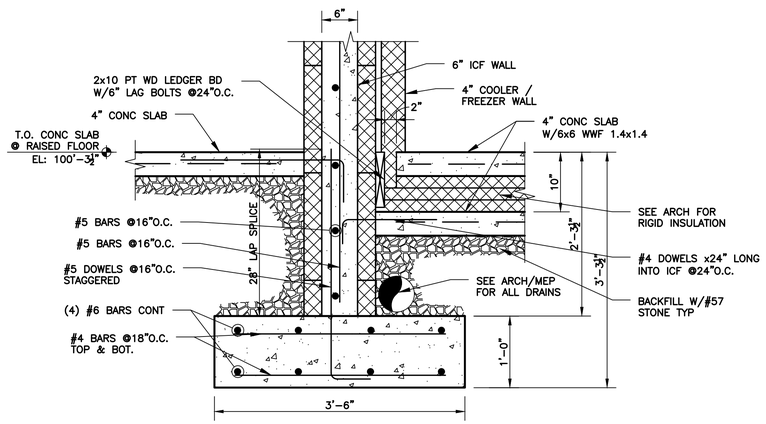

SECTION H S2.1

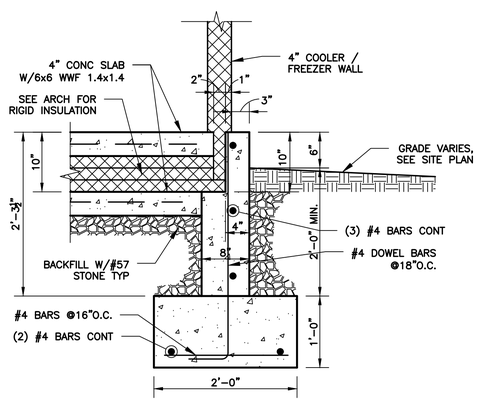

SECTION J S2.1

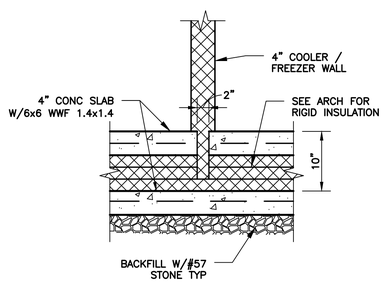

SECTION K S2.1

CMW The Shape of Ideas

Architecture
Civil Engineering
Landscape Architecture
a: 249 Easy Main Street, Suite 100
Lexington, Ky 40507
o: (859) 254-6623
w: www.cmwaec.com

POAGE ENGINEERS & ASSOCIATES
880 Sparta Court, Suite 200
Lexington, KY 40504
Phone: (859) 255-9034
Fax: (859) 252-3130

STATE OF KENTUCKY
BRIAN D. SCOTT 21768
LICENSED PROFESSIONAL ENGINEER
5/31/2024

SECTIONS & DETAILS

Five Star #4460 - Hopkinsville

NEWCOMB OIL CO. LLC
3070 PEMBROOKE RD.
HOPKINSVILLE, KY 42240

CONSTRUCTION DOCUMENTS

Issue Date:	May 31, 2024
Drawn By:	HMM
Checked By:	BDS
Revisions:	

Mark	Date

AHJ SEAL

Project Number
24086

S2.1

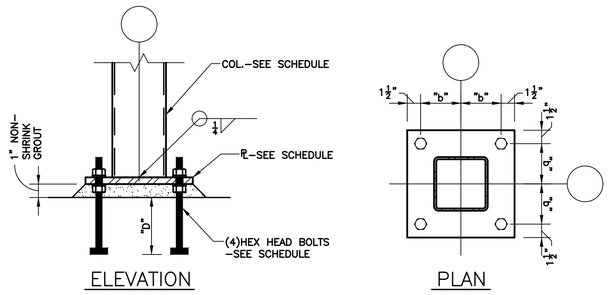

TUBE STEEL COLUMN/BASE PL SCHEDULE				
COLUMN	PLATE SIZE	BOLT SPACING "b"	BOLT ø	EMBED DEPTH "D"
HSS6x6	¾"x12"x12"	4½"	¾"	12"
HSS4x4	¾"x10"x10"	3½"	¾"	9"

TYPICAL BASE PLATE DETAIL

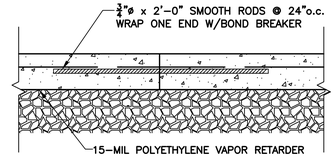

TYPICAL CONSTRUCTION JOINT DETAIL

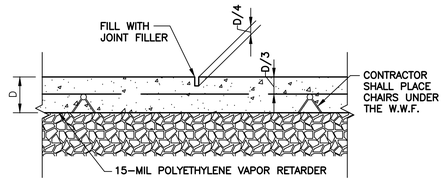

TYPICAL CONTROL JOINT DETAIL

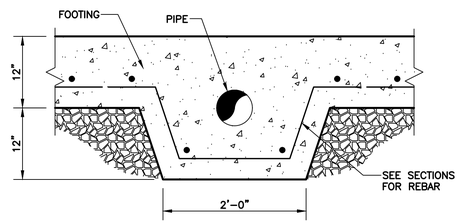

TYPICAL PIPE PERFORATION @ FOOTINGS

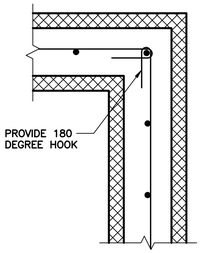

TYPICAL CORNER ICF REINFORCING DETAIL

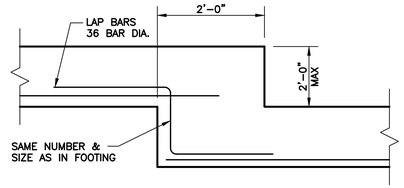

TYPICAL STEP FOOTING

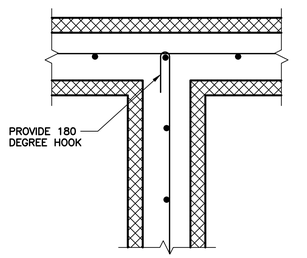

TYPICAL WALL ICF INTERSECTION REINFORCING DETAIL

NOTES: 1) FOR "d" LESS THAN 6"–NO REINFORCING IS REQUIRED
2) FOR "P" LESS THAN 100#–NO REINFORCING IS REQUIRED

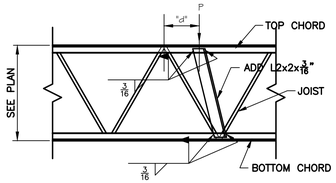

TOP CHORD CONCENTRATED LOAD

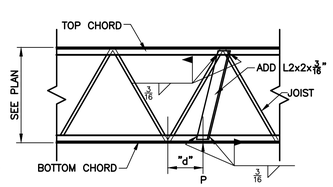

BOTTOM CHORD CONCENTRATED LOAD

TYPICAL REINFORCING REQUIRED AT ALL CONCENTRATED LOADS

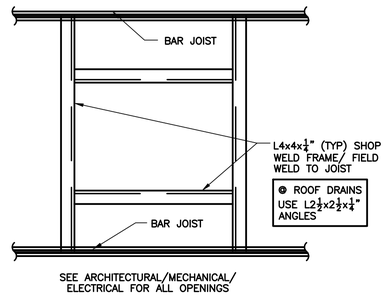

SEE ARCHITECTURAL/MECHANICAL/ ELECTRICAL FOR ALL OPENINGS

TYPICAL ROOF OPENING

(FOR ALL OPENINGS GREATER THAN 12")
(INCLUDES BUT IS NOT LIMITED TO ROOF DRAINS)

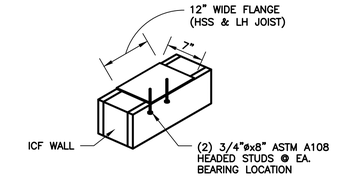

TYPICAL BEARING PLATE DETAIL

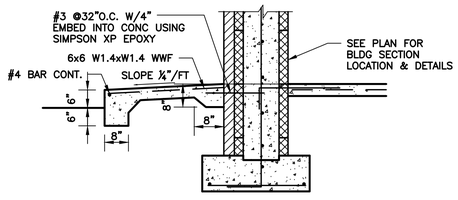

TYPICAL SIDEWALK DETAIL

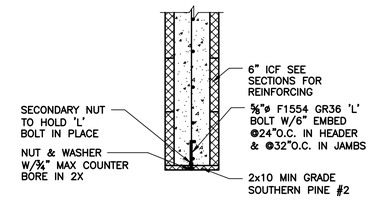

TYPICAL ICF OPENING JAMB/HEAD DETAIL

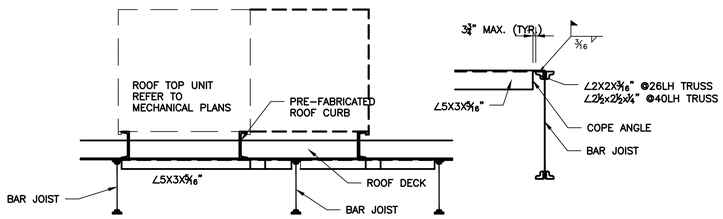

RTU MECH UNIT SUPPORT SECTION

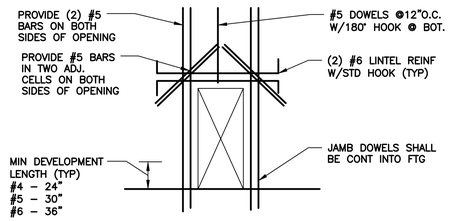

TYPICAL REINFORCING @ OPENINGS IN ICF WALL

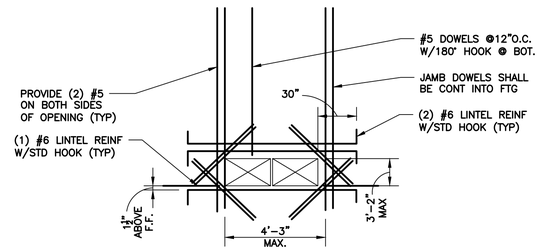

TYPICAL REINFORCING @ OPENINGS IN ICF WALL

CMW The Shape of Ideas

Architecture
Civil Engineering
Landscape Architecture
a: 249 Easy Main Street, Suite 100 Lexington, Ky 40507
o: (859) 254-6623
w: www.cmwaec.com

POAGE ENGINEERS & ASSOCIATES
880 Sparta Court, Suite 200 Lexington, KY 40504 Phone: (859) 255-9034 Fax: (859) 252-3130

STATE OF KENTUCKY BRIAN D. SCOTT 21768 LICENSED PROFESSIONAL ENGINEER 5/31/2024

SECTIONS & DETAILS
Five Star #4460 - Hopkinsville
NEWCOMB OIL CO. LLC
3070 PEMBROOKE RD.
HOPKINSVILLE, KY 42240

CONSTRUCTION DOCUMENTS

Issue Date:	May 31, 2024
Drawn By:	HMM
Checked By:	BDS
Revisions:	

Mark	Date

AHJ SEAL

Project Number **24086**

S2.2

POAGE/24086/05.31.2024/HMM

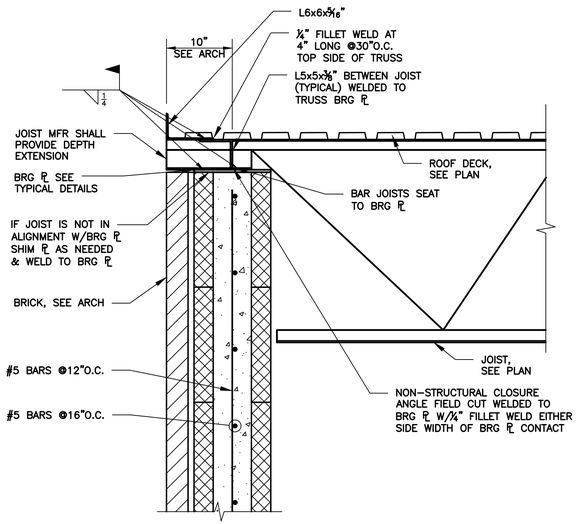

SECTION A S2.3

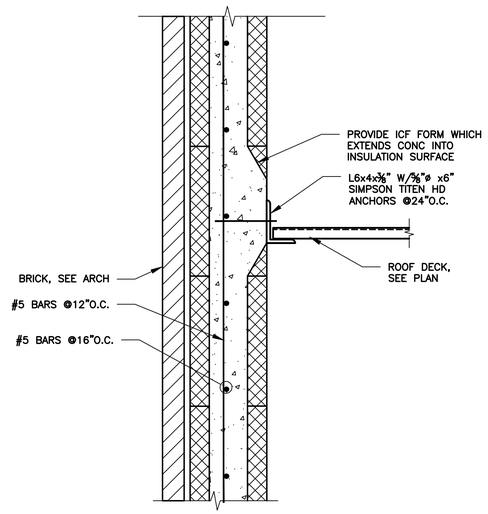

SECTION B S2.3

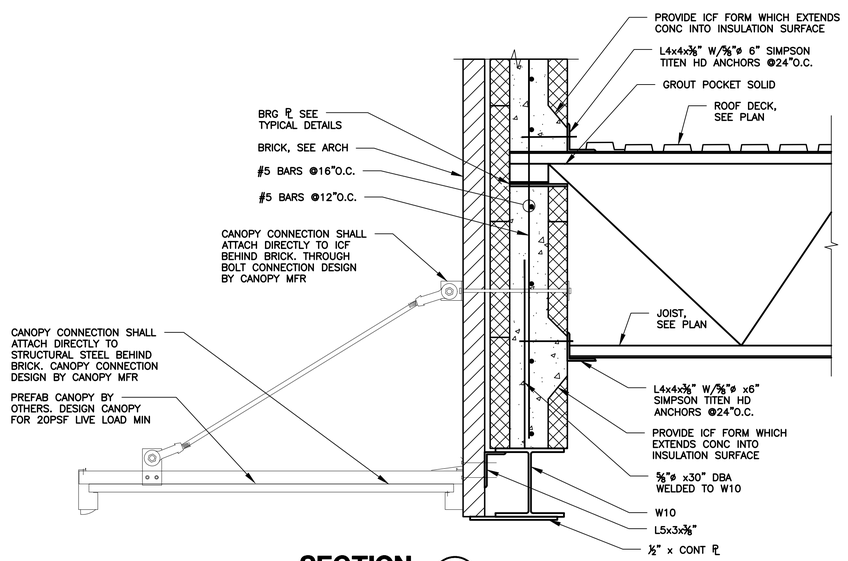

SECTION C S2.3

SECTION D S2.3

SECTION E S2.3

SECTION G S2.3

SECTION F S2.3

CMW The Shape of Ideas

Architecture
Civil Engineering
Landscape Architecture
a: 249 Easy Main Street, Suite 100
Lexington, Ky 40507
o: (859) 254-6623
w: www.cmwaec.com

POAGE ENGINEERS & ASSOCIATES
880 Sparta Court, Suite 200
Lexington, KY 40504
Phone: (859) 255-9034
Fax: (859) 252-3130

STATE OF KENTUCKY
BRIAN D. SCOTT 21768
LICENSED PROFESSIONAL ENGINEER
5/31/2024

SECTIONS & DETAILS

Five Star #4460 - Hopkinsville
NEWCOMB OIL CO. LLC
3070 PEMBROOKE RD.
HOPKINSVILLE, KY 42240

CONSTRUCTION DOCUMENTS

Issue Date:	May 31, 2024
Drawn By:	HMM
Checked By:	BDS
Revisions:	

Mark	Date

AHJ SEAL

Project Number
24086

S2.3

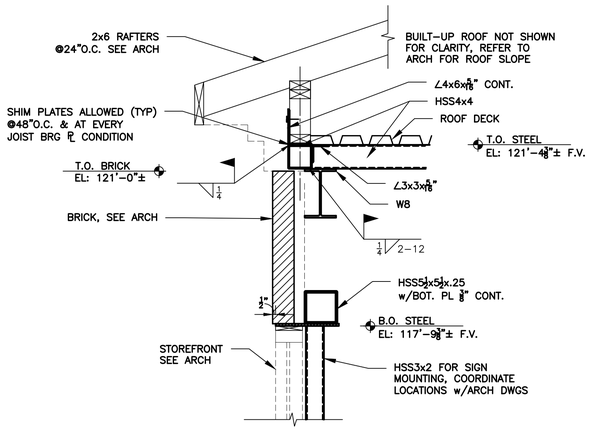

SECTION A S2.4

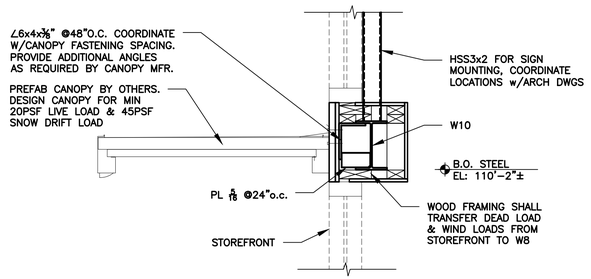

SECTION B S2.4

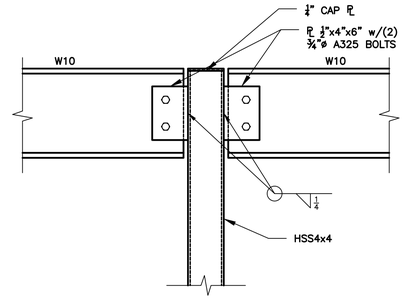

DETAIL C S2.4

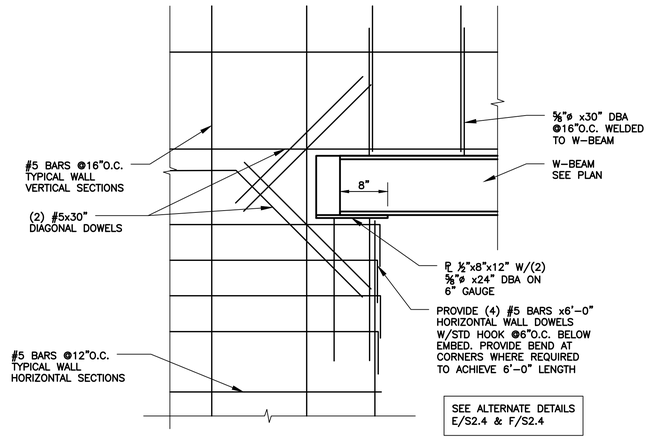

SECTION D S2.4

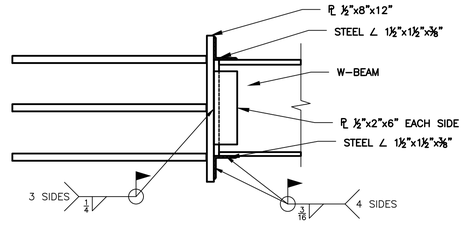

DETAIL E S2.4

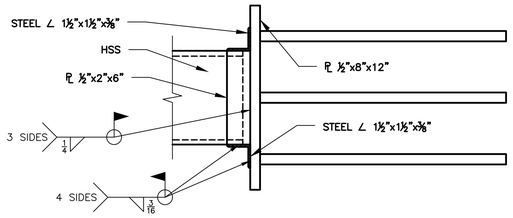

DETAIL F S2.4

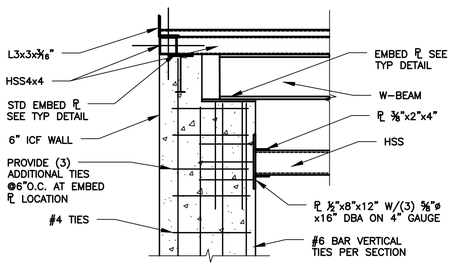

SECTION G S2.4

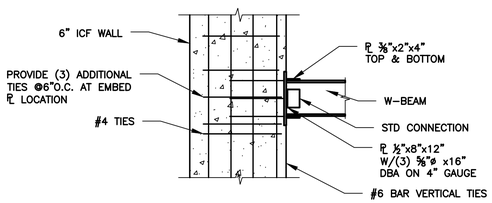

SECTION H S2.4

CMW The Shape of Ideas
Architecture
Civil Engineering
Landscape Architecture
a: 249 Easy Main Street, Suite 100 Lexington, Ky 40507
o: (859) 254-6623
w: www.cmwaec.com

POAGE ENGINEERS & ASSOCIATES
880 Sparta Court, Suite 200 Lexington, KY 40504 Phone: (859) 255-9034 Fax: (859) 252-3130

STATE OF KENTUCKY BRIAN D. SCOTT 21768 LICENSED PROFESSIONAL ENGINEER 5/31/2024

SECTIONS & DETAILS

Five Star #4460 - Hopkinsville
NEWCOMB OIL CO. LLC
3070 PEMBROOKE RD.
HOPKINSVILLE, KY 42240

CONSTRUCTION DOCUMENTS

Issue Date:	May 31, 2024
Drawn By:	HMM
Checked By:	BDS
Revisions:	

Mark	Date

AHJ SEAL

Project Number
24086

S2.4

P:\NDZ\24086\05.31.2024\.rvt\HM

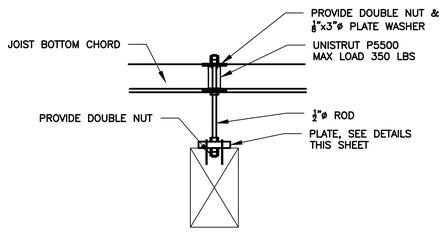

DETAIL A S2.5

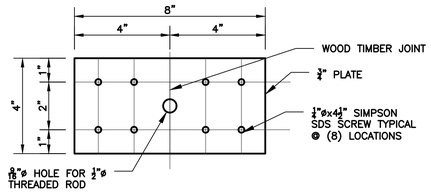

DETAIL B S2.5

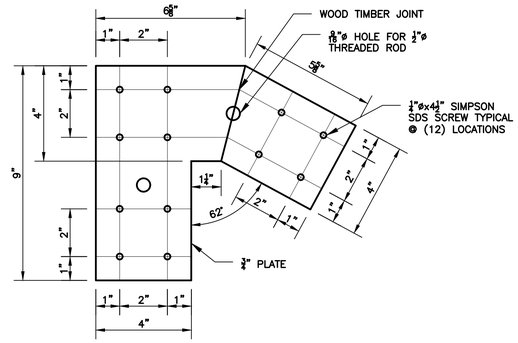

DETAIL C S2.5

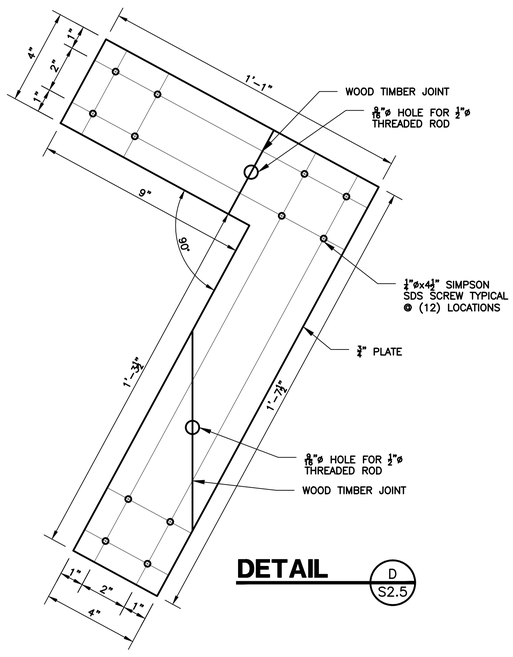

DETAIL D S2.5

NOT USED E S2.5

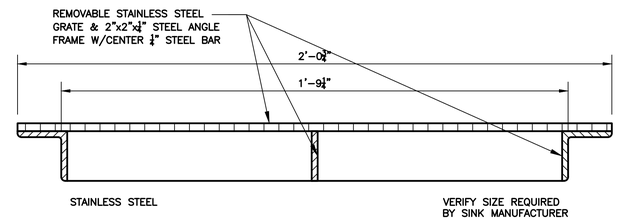

SECTION F S2.5

CMW The Shape of Ideas
Architecture
Civil Engineering
Landscape Architecture
a: 249 Easy Main Street, Suite 100
Lexington, Ky 40507
o: (859) 254-6623
w: www.cmwaec.com

POAGE ENGINEERS & ASSOCIATES
880 Sparta Court, Suite 200
Lexington, KY 40504
Phone: (859) 255-9034
Fax: (859) 252-3130

STATE OF KENTUCKY
BRIAN D. SCOTT
LICENSED PROFESSIONAL ENGINEER
5/31/2024

SECTIONS & DETAILS
Five Star #4460 - Hopkinsville
NEWCOMB OIL CO. LLC
3070 PEMBROOKE RD.
HOPKINSVILLE, KY 42240

CONSTRUCTION DOCUMENTS

Issue Date:	May 31, 2024
Drawn By:	HMM
Checked By:	BDS
Revisions:	

Mark	Date

AHJ SEAL

Project Number
24086

S2.5

POAGE/24086/05.31.2024/HMM

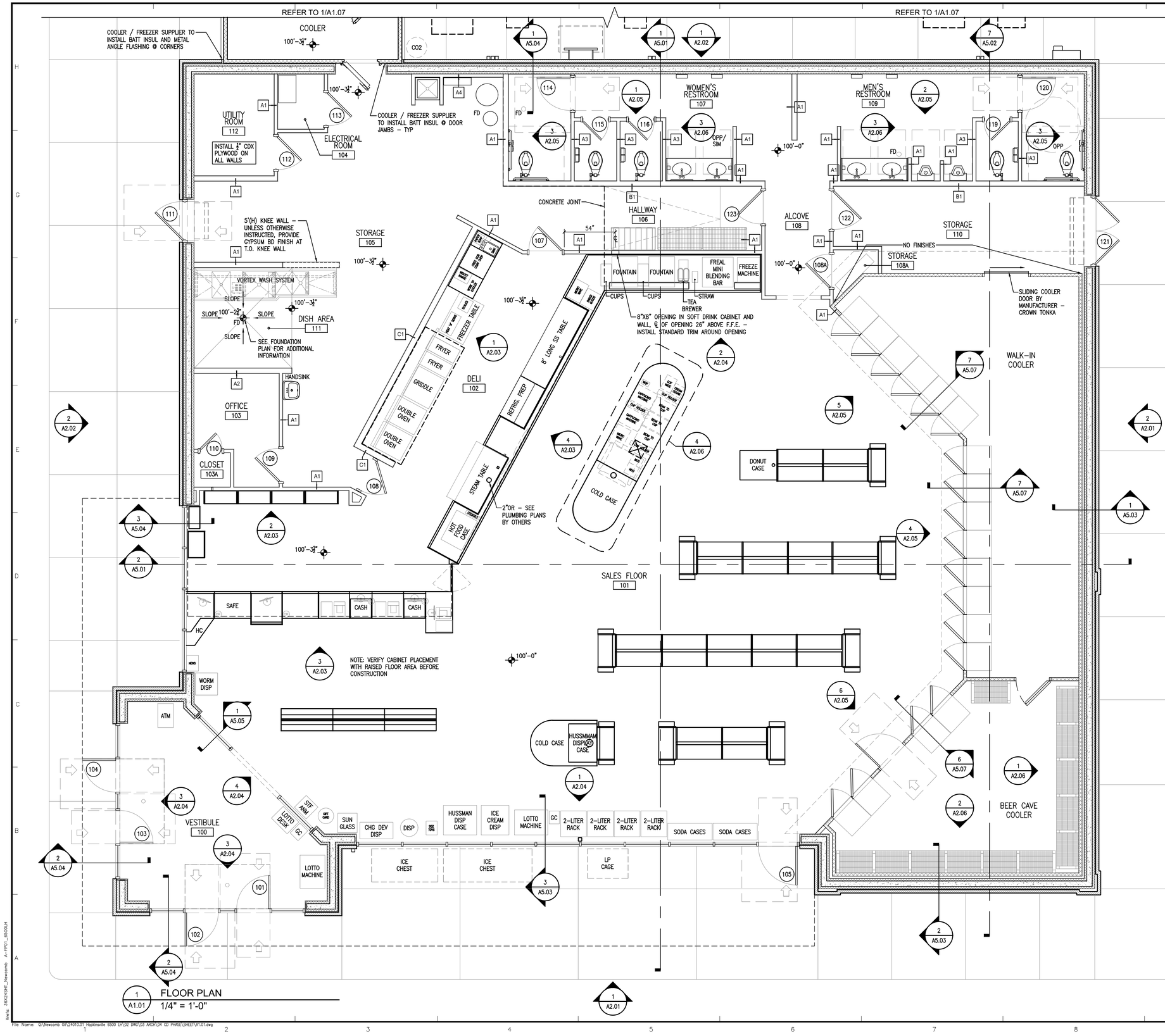

1 A1.01 FLOOR PLAN
1/4" = 1'-0"

GENERAL NOTES

A. THESE DRAWINGS ARE DIAGRAMMATIC IN NATURE, FIELD VERIFY ALL CONDITIONS, QUANTITIES AND MATERIALS. REPORT DISCREPANCIES TO ARCHITECT FOR CLARIFICATION. DO NOT SCALE DRAWINGS.

B. CONTRACTOR IS RESPONSIBLE FOR COORDINATION OF ALL CONSTRUCTION. ALL CONTRACTORS OF ALL DISCIPLINES TO COORDINATE CONSTRUCTION PRIOR TO INSTALLATION.

C. DIMENSIONS ARE TO THE FACE OF STUD, CONCRETE, OR ICF UNLESS NOTED OTHERWISE.

D. ICF: INSTALL PER MANUFACTURERS RECOMMENDATIONS.

E. ICF: ALL INTERIOR ICF WALLS TO RECEIVE 1/2" MIN. GYP. BD. (15 MIN. THERMAL BARRIER). GYP. BD. BEHIND COOLERS AND FREEZERS AND IN RESTROOMS SHALL BE MOISTURE AND MOLD RESISTANT GYP. BD.

F. ICF: SEE STRUCTURAL DRAWINGS FOR REINFORCING DESIGN IN ICF WALLS

G. CAULK DOOR JAMBS AND INSIDE CORNERS IN CERAMIC TILE WALLS WITH SANDED CAULK TO MATCH THE GROUT COLOR. ALL OTHER DOOR JAMBS AND MARLITE SHALL BE CAULKED WITH SHERWIN WILLIAMS POWER HOUSE 60 YR, COLOR: TO MATCH PAINT.

H. INTERIOR WALLS SHALL BE 2X4 WD STUDS 16" O.C. WITH 1/2" GYP BD. EACH SIDE UNLESS NOTED OTHERWISE. WALLS BEHIND COOLER AND FREEZERS SHALL HAVE MOISTURE AND MOLD RESISTANT GYP. BD.. PROVIDE BLOCKING IN WALLS FOR DOOR WALL STOPS.

I. ALL COOLER DOORS SHALL BE INSTALLED 8" A.F.F.

J. ALL UNISTRUTS SHALL BE INSTALLED OPEN SIDE UP.

K. ALL DRYWALL CEILINGS SHALL BE GLUED AND SCREWED.

L. OWNER SHALL VERIFY THAT GEOTECHNICAL CONDITIONS AND SOIL BEARING CAPACITY MEET THE REQUIREMENTS OF THE "FOUNDATION DESIGN" NOTED IN THE STRUCTURAL DRAWINGS.

M. FILL ALL TRENCHES UNDER PAVEMENT WITH STONE

N. ALL PROPERTY CORNER PINS SHALL BE ENCASED IN CONCRETE 12" DEEP, 8" DIAMETER AND SHALL BE FLUSH WITH THE GROUND.

O. ALL 2X4 AND 2X6 WOOD STUDS SHALL BE #2 SPRUCE ONLY.

P. CONTRACTOR SHALL THOROUGHLY EXAMINE THE SITE AFTER COMPLETION OF THE BRICK TO ENSURE WASTE BRICK AND MORTAR MATERIAL HAS NOT BEEN BURIED IN THE FOOTING TRENCHES AND THAT WASTE BRICK AND MORTAR MATERIAL HAS BEEN COLLECTED AND REMOVED FROM THE SITE.

Q. ONLY USE 'SURE KLEAN VANA–TROL' FOR BRICK CLEANING.

R. SAND TEXTURED CAULK TO BE USED WHEN CAULKING BRICK EXPANSION JOINTS. CLAY TAN 225–U (LRV –19)

S. PROVIDE LOW WEEP VENTS IN VENEER MASONRY BRICK. USE 3/8" HONEYCOMB CELL VENT.

T. CONTROL JOINTS IN EXTERIOR BUILDING CONCRETE SIDEWALKS AND JOINTS IN BLACK CONCRETE SHALL BE TOOLED AND SAW CUT. REFER TO STRUCTURAL DRAWINGS FOR MORE INFORMATION.

U. THE JOINT BETWEEN THE BUILDING SIDEWALK AND THE BLACK CONCRETE PAD SHALL BE A CONSTRUCTION JOINT NOT AN EXPANSION JOINT. NO EXPANSION MATERIAL SHALL BE INSTALLED.

V. NEWCOMB OIL SHALL CHECK WALLS FOR ALIGNMENT, LOCATION OF ELECTRICAL AND PLUMBING AND STRING LINE THE WALLS PRIOR TO DRYWALL BEING INSTALLED.

W. THE CANOPY CONTRACTOR SHALL INSTALL CANOPY SIGNS. THE BUILDING ELECTRICAL CONTRACTOR SHALL INSTALL THE BUILDING SIGNS.

X. SEE CIVIL DRAWINGS FOR BOLLARD LOCATION. SEE DETAIL 02/A5.02 FOR BOLLARD DETAIL.

Y. GENERAL CONTRACTOR IS RESPONSIBLE FOR COORDINATION OF ALL SUB TRADES AND REQUIREMENTS BY OWNER.

Z. ELECTRICAL, HVAC, AND PLUMBING TO BE RELOCATED PER FEDERAL, STATE, AND LOCAL CODES. GENERAL CONTRACTOR TO COORDINATE.

WALL / PARTITION LEGEND

PLAN LEGEND	DESCRIPTION
	2X4 WOOD STUD WALL UNLESS NOTED OTHERWISE
	REFER TO DETAIL 2/A3.03 FOR DETAILS OF PARTITION TYPES A1, A2, A3, A4, A4.1, A5, B1, C1
	I.C.F. WALLS TO BE INSTALLED PER MANUFACTURERS RECOMMENDATIONS

* ALL MATERIALS ARE SIZES LISTED IN THIS LEGEND UNLESS OTHERWISE DIMENSIONED ON THIS PLAN OR SPECIFIED IN THE DETAILS AT A DIFFERENT SIZE.

CMW The Shape of Ideas
Architecture
Civil Engineering
Landscape Architecture
a: 249 East Main Street Suite 100 Lexington, Kentucky 40507
o: (859) 254-6623
w: www.cmwsec.com

BILL PICKERING REGISTERED No. 19115 COMMONWEALTH OF KENTUCKY LICENSED ARCHITECT
31 MAY 2024

FLOOR PLAN
FiveStar - #4460 Hopkinsville
NEWCOMB OIL CO., LLC
3070 PEMBROKE RD.
HOPKINSVILLE, KY 42240

CONSTRUCTION DOCUMENTS

Issue Date:	May 29, 2024
Drawn By:	JMT
Checked By:	BP
Revisions:	-
	-
	-
	-
	-
Mark	Date

AHJ SEAL

Project Number
24010.01

A1.01

File Name: Q:\Newcomb Oil\24010.01 Hopkinsville 6500 LH\02 DWG\03 ARCH\04 CD PHASE\SHEET\A1.01.dwg
PLOT DATE: Thursday, June 20, 2024 9:14:28 AM
Xrefs: 36X24SHT_Newcomb A-FP01_6500LH

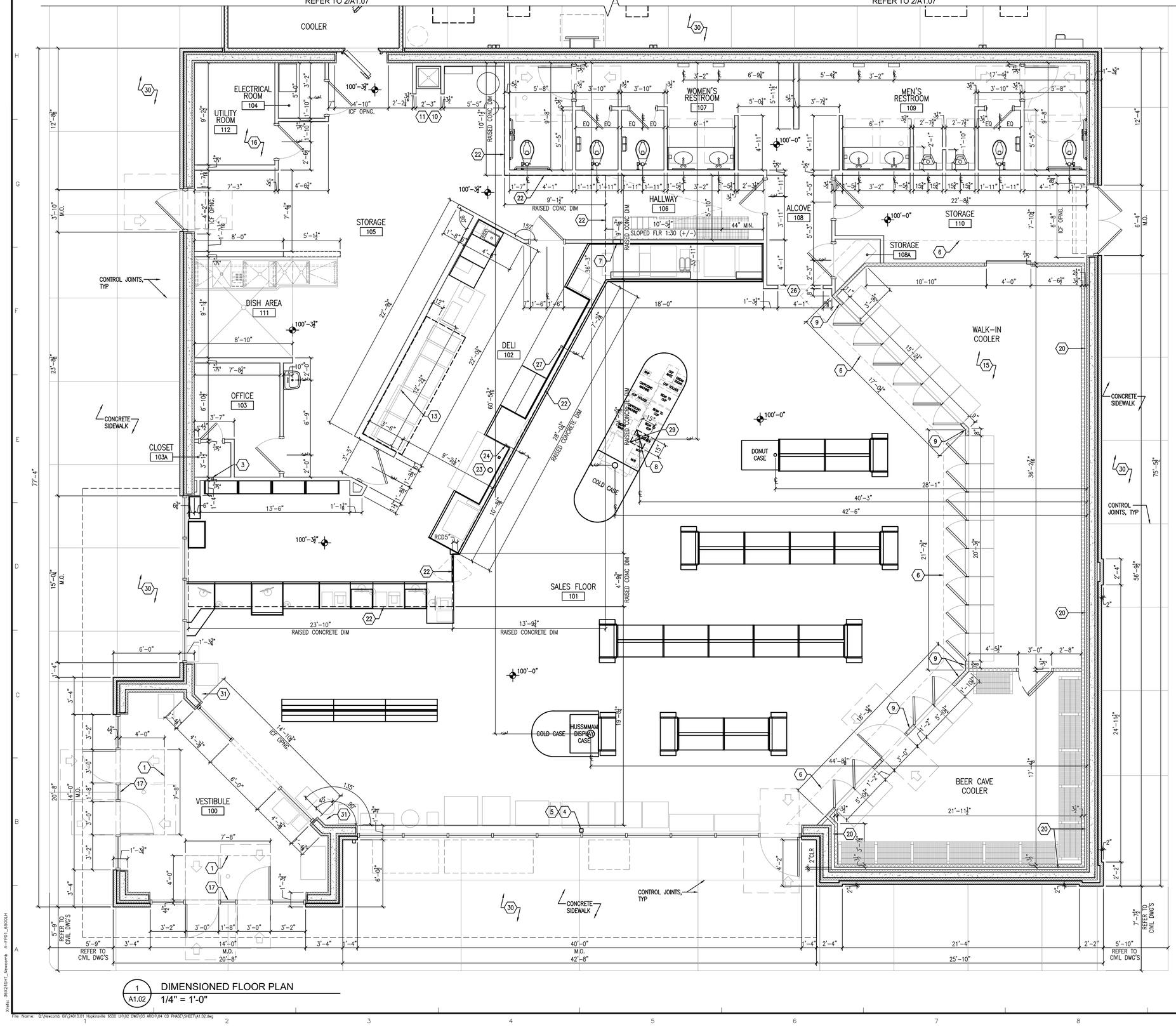

1 A1.02 DIMENSIONED FLOOR PLAN
1/4" = 1'-0"

GENERAL NOTES

A. REFER TO SHEET A1.01 'GENERAL NOTES'

B. SEE CIVIL DRAWINGS FOR BOLLARD LOCATIONS AROUND THE BUILDING. SEE DETAIL 02/A5.02 FOR BOLLARD DETAIL.

C. REVIEW CIVIL DRAWINGS BEFORE FORMING OUTSIDE SIDEWALKS –AND REVIEW SITE FOR CANOPY SIZE

SHEET KEYNOTES ⬡

1. McNICHOLS QUALITY DURAGRID PULTRUDED FIBERGLASS GRATING (PART NO. F112106S42) W/ McNICHOLS QUALITY FIBERGLASS EMBEDMENT ANGLE (PART NO. F1FE111520).
2. 2x4 FURRING AROUND PLUMBING VENT.
3. INSTALL A STUD CENTERED ON CLOSET BACK WALL TO SERVE AS VERTICAL BLOCKING FOR OWNER INSTALLED EQUIPMENT.
4. PAINT ALL SURFACE MOUNTED CONDUIT FOR ELECTRICAL BOXES "BLACK".
5. TUBE STEEL COLUMN, PAINT "BLACK". REFER TO STRUCTURAL DRAWINGS.
6. DASHED LINE INDICATES 1" RIGID INSULATION UNDER COOLERS – SEE SECTION 7/A5.02
7. 8x8 OPENING IN SOFT DRINK CABINET AND WALL, CL OF OPENING 32" ABOVE RAMP. INSTALL STANDARD TRIM AROUND OPENING.
8. SLAB OPENING FOR UTILITIES, REFER TO ELEC. AND PLUMB. DRAWINGS VERIFY IN FIELD.
9. 1/4" CEMENT BOARD INSTALLED ON FACE OF COOLERS –REFER TO INTERIOR ELEVATIONS FOR WALL FINISH – REFER TO PARTITION DETAILS A2 AND A2.1/A3.03 FOR PARTITION AND CONTINUATION OF WALL FINISH ABOVE COOLERS.
10. MOP SINK RECESSED IN CONCRETE FLOOR SLAB WITH GRATE AND ANGLE FRAME – GRATE TOP AT FINISH FLOOR –WALLS ON (3) THREE SIDES OF MOP SINK SHALL BE CONCRETE UP TO 2'–0"AFF –REFER TO DETAILS 2/A5.05 & 4/A5.05 –REFER TO DETAIL G/S2.1 FOR GRATE AND ANGLE FRAME – REFER TO PLUMBING FOR MOP SINK.
11. INSTALL MARLITE ON ALL WALLS AROUND AND ABOVE MOP SINK UP TO 10'–0" – – MARLITE EXTENDS TO LIMITS INDICATED IN FINISH FLOOR PLAN 1/A1.04.
12. INSTALL MARLITE UP TO 10'–0", EXTEND MARLITE 8'–0" ALONG WALL AND AROUND END OF WING WALL.
13. INSTALL FLOOR STOP BEHIND DEEP FRYER AND GRIDDLE, FLOOR STOP SHALL BE A 2x2 ALUM. ANGLE 10'–0" LONG BOLTED TO THE FLOOR 12" FROM WALL.
14. FRAMED OPENING IN WALL CENTERED ABOVE DOOR FOR TRANSFER AIR GRILLES INSTALLED BOTH SIDES – REFER TO MECHANICAL M2.01 FOR GRILLE SIZE AND INSTALLATION DETAIL.
15. WALK–IN COOLER COMBO TO BE PROVIDED BY WALK–IN COOLER MANUFACTURER, WITH SEALED CONCRETE FLOOR (BY G.C. TYP.).
16. INSTALL 1/2" CDX FIRE–RATED PLYWOOD ON ALL WALLS.
17. REMOVABLE CENTER GLASS AND ALUM. FRAMES THIS DOOR ONLY.
18. SEE CIVIL DRAWINGS FOR BOLLARD LOCATION. SEE DETAIL 02/A5.02 FOR BOLLARD DETAIL.
19. ALIGN BOLLARDS WITH L.P. CAGE – REFER TO 02/A5.02 FOR ALIGNMENT. SET BOLLARDS 1" AWAY FROM SIDEWALK.
20. 2" MIN. AIR SPACE REQUIRED BTWN, EXTERIOR WALL AND WALK–IN COOLER, (TYP.)
21. CONCRETE EQUIPMENT PAD.
22. EDGE OF CONCRETE FLOOR SLAB RAISED 3–1/2" – REFER TO FOUNDATION PLAN F1.0 FOR DIMENSION LAYOUT OF WHERE SLAB RAISED.
23. POWER SUPPLY – VERIFY W/ ELECTRICAL PLANS
24. COLD WATER SUPPLY – VERIFY W/ PLUMBING PLANS
25. OPEN DRAIN
26. CASE OPENING WITH TILE, USE SCHLUTER TILE EDGE
27. FOUNTAIN DRAIN (OR) – SEE PLUMBING PLANS
28. 2" SLEEVE 9'–0" A.F.F., 2'–0" OFF OF WALL.
29. SPARE 3" CONDUIT TO ELECTRIC ROOM
30. REVIEW CIVIL DRAWINGS BEFORE FORMING OUTSIDE SIDEWALKS, & REVIEW SITE FOR CANOPY SIZE.
31. PROVIDE 6" WOOD STUD FURRED–OUT WALL W/ ½" GYPSUM BOARD – COORDINATE W/ PLUMBING VENT INSTALLATION REQUIREMENTS.

CMW The Shape of Ideas
Architecture
Civil Engineering
Landscape Architecture
a: 249 East Main Street
Suite 100
Lexington, Kentucky 40507
o: (859) 254-6623
w: www.cmwsec.com

BILL PICKERING REGISTERED No. 4915 COMMONWEALTH OF KENTUCKY ARCHITECT
31 MAY 2024

DIMENSIONED FLOOR PLAN
FiveStar - #4460 Hopkinsville
NEWCOMB OIL CO., LLC
3070 PEMBROKE RD.
HOPKINSVILLE, KY 42240

CONSTRUCTION DOCUMENTS

Issue Date:	May 29, 2024
Drawn By:	JMT
Checked By:	BP
Revisions:	
	-
	-
	-
	-
	-
Mark	Date

AHJ SEAL

Project Number
24010.01

A1.02

Mark: 3X24-SHT_Newcomb A-FP01_650GI.lsl
File Name: Q:\Newcomb Oil\24010.01 Hopkinsville 650GI LH\02 DWG\03 ARCH\04 CD PHASE\SHEET\A1.02.dwg
PLOT DATE: Thursday, June 20, 2024 9:15:42 AM

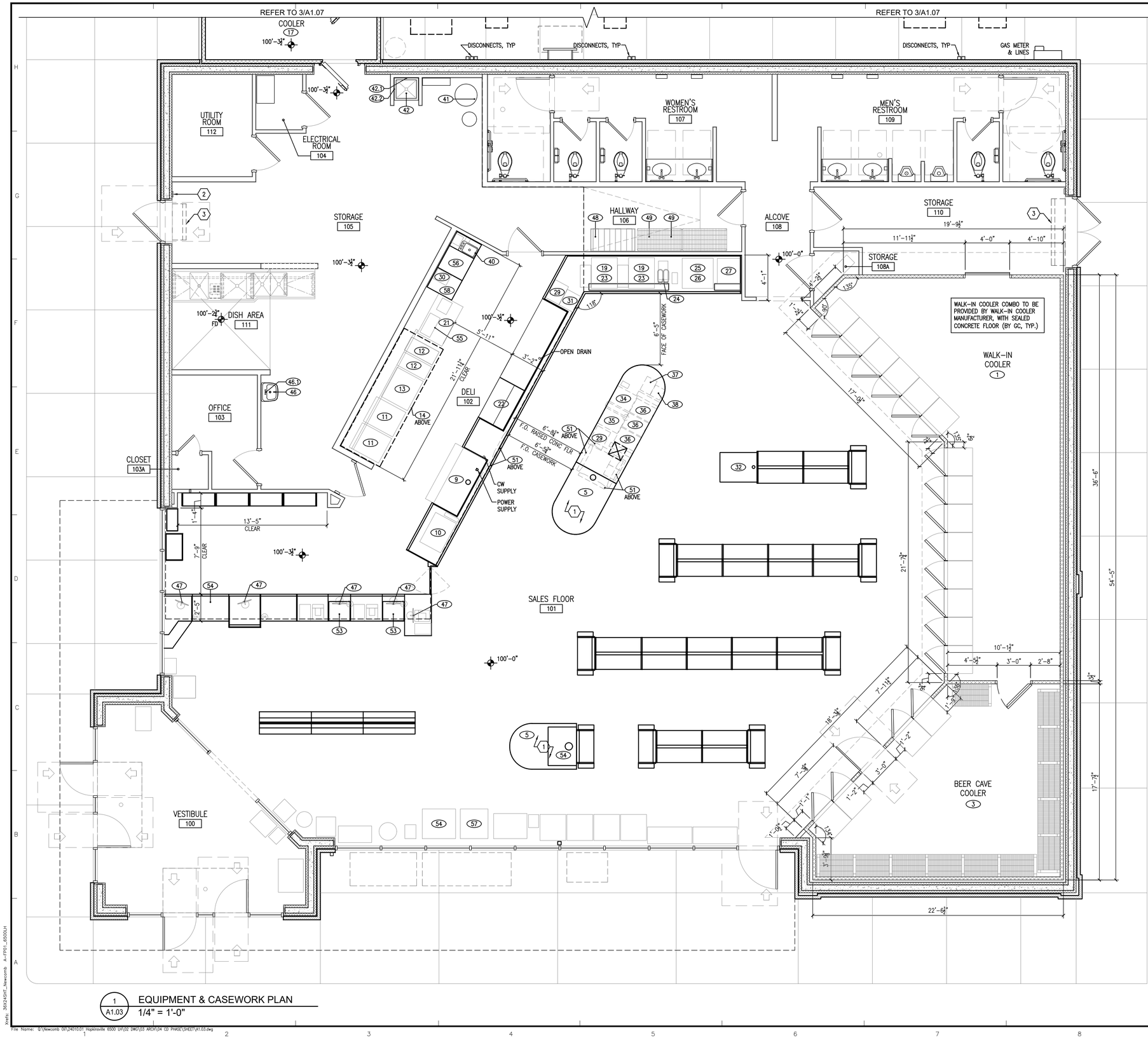

1 A1.03 EQUIPMENT & CASEWORK PLAN
1/4" = 1'-0"

GENERAL NOTES

A. REFER TO SHEET A1.01 'GENERAL NOTES'

SHEET KEYNOTES ⬡

1. COLD CASE EQUIPMENT REQUIRES CONDUITS AND DRAIN – VERIFY W/ PLUMBING PLANS
2. 'LoCENTER' ALARM KEYPAD – INSTALL 54"–60" AFF, 6"–8" AWAY FROM DOOR FRAME – SEE ELECTRICAL
3. AIR CURTAIN 'SERIES #CHD10' AS MANUFACTURED BERNER AIR CURTAINS – COORDINATE WIDTH OF UNIT W/ OWNER. INSTALL PER MANUFACTURER'S STANDARD REQUIREMENTS – SEE MECHANICAL AND ELECTRICAL

EQUIPMENT SCHEDULE

ITEM NO	QTY	EQUIPMENT CATEGORY	MANUFACTURER	MODEL NUMBER	OFCI	OFCI	CFCI
1	1	WALK-IN COOLER			•		
2	1	OUTDOOR CONDENSING UNIT			•		
3	1	BEER CAVE WALK-IN COOLER			•		
4	1	OUTDOOR CONDENSING UNIT			•		
5	1	MULTI-DECK ISLAND MERCHANDISER	HUSSMAN	IM-04-R	•		
6	1	OUTDOOR CONDENSING UNIT			•		
7	1	NOT USED					
8	1	NOT USED					
9	1	4 WELL HOT FOOD TABLE	DELFIELD		•		
10	1	HOT FOOD MERCHANDISER	HATCO	120V-1550 WATTS	•		
11	2	CONVECTION OVEN W/ HOLDING CABINET	MOFFAT	TURBOFAN G32D5 W/ P8M PROOFER HOLDER	•		
12	2	FLOOR MODEL GAS FRYER	PITCO	SOLSTICE SG14	•		
13	1	GRIDDLE	STAR	824TSA	•		
13.1	1	SS BASE CABINET W/ ROLLERS			•		
14	1	EXHAUST HOOD	CAPTIVE AIR		•		
15	1	WALK-IN FREEZER			•		
16	1	OUTDOOR CONDENSING UNIT			•		
17	1	DELI WALK-IN			•		
18	1	OUTDOOR CONDENSING UNIT			•		
19	2	REMOTE ICE MAKER (INSTALLED ON FOUNTAIN)	SCOTSMAN	N1322R-32A	•		
20	3	OUTDOO REMOTE CONDENSER			•		
21	1	WORKTOP SOLID DOOR FREEZER	TRUE	TWT-48F-HC	•		
22	1	FOOD PREP TABLE	TRUE	TSSU-48-12-HC	•		
23	2	SODA FOUNTAIN			•		
24	1	TEA BREWER			•		
25	1	FREAL BLENDER	FREAL	BLENDER	•		
26	1	FREAL MINI BLENDIN BAR	FREAL	MINI BLENDING BAR	•		
27	1	FREEZE MACHINE	TAYLOR CROWN		•		
28	2	COFFEE MAKER			•		
29	2	MICROWAVE			•		
30	1	INDUCTION RANGE			•		
31	1	BAKED GOODS			•		
32	1	DONUT CASE			•		
33	1	FRAPP MACHINE	BUNN	ULTRA 2HP BLK	•		
34	1	CHOC. CAPPUCCINO MACHINE	BUNN	iMIX-5S+	•		
35	1	CAPPUCCINO MACHINE	BUNN	iMIX-5S+	•		
36	3	BEAN TO CUP - COFFEE	BUNN	FAST CUP	•		
37	1	CREAMER	NESTLE	2 HEAD DISPENSER	•		
38	1	SUGAR	PERFECT SERVINGS	POWDER DISPENSER	•		
39	1	PAN CABINET			•		
40	1	HANK SINK, INTERGAL WITH COUNTERTOP				•	
41	1	WATER FILTER	PENTAIR	EV9437-10 HIGH FLOW CSR QUAD-MC SYSTEM		•	
42	1	MOP SINK, RECESSED					•
42.1	1	FAUCET					•
42.2	1	MOP HANGER			•		
43	1	VORTEX WASH SYSTEM			•		
44	1	NOT USED					
45	1	WALL MOUNTED SHELVING (14"X36")	EAGLE - METAL MASTERS	GWB1436VG	•		
46	1	HAND SINK - WALL HUNG	MANSFIELD GRAND ISLE	2018 HBNS VITREOUS CHINA			•
46.1	1	FAUCET	AMERICAN STANDARD	RELIANT 3 - 7385.004			•
47	5	POS TERMINALS			•		
48	1	BAG-N-BOX			•		
49	1	WIRE SHELVING (18"X36") W/ ROLLERS	EAGLE - METAL MASTERS	1836VG	•		
50	1	WIRE SHELVING (24"X36") W/ ROLLERS	EAGLE - METAL MASTERS	2436VG	•		
51	6	SUSPENDED TV MONITORS			•		
52	1	SAFE	ARMOR	CS6-71XXU	•		
53	2	PAY POD	CPI	240057009	•		
54	2	HUSSMAN DISPLAY CASE	HUSSMAN	GSVM-A	•		
55	1	FOOD WARMER	VOLLRATH	72050	•		
56	1	CONVECTION WARMING OVEN	CRES COR	CO-151-HW-UA	•		
57	1	ICE CREAM CASE	DREYER	1 DOOR UPRIGHT	•		
58	1	WORKTOP COOLER	TRUE	TWT-27-HC	•		

CMW The Shape of Ideas
Architecture
Civil Engineering
Landscape Architecture
a: 249 East Main Street
Suite 100
Lexington, Kentucky 40507
o: (859) 254-6623
w: www.cmwaec.com

BILL PICKERING REGISTERED No. 19915 COMMONWEALTH OF KENTUCKY LICENSED ARCHITECT
31 MAY 2024

EQUIPMENT & CASEWORK PLAN

FiveStar - #4460 Hopkinsville
NEWCOMB OIL CO., LLC
3070 PEMBROKE RD.
HOPKINSVILLE, KY 42240

CONSTRUCTION DOCUMENTS

Issue Date:	May 29, 2024
Drawn By:	JMT
Checked By:	BP
Revisions:	
	-
	-
	-
	-
	-
Mark	Date

AHJ SEAL

Project Number
24010.01

A1.03

File Name: Q:\Newcomb Oil_24010.01 Hopkinsville 6500 LH_02 DWG\03 ARCH\04 CD PHASE\SHEET\A1.03.dwg
PLOT DATE: Thursday, June 20, 2024 9:16:18 AM
Xrefs: 24x24SHT_Newcomb A-FP01_6500LH

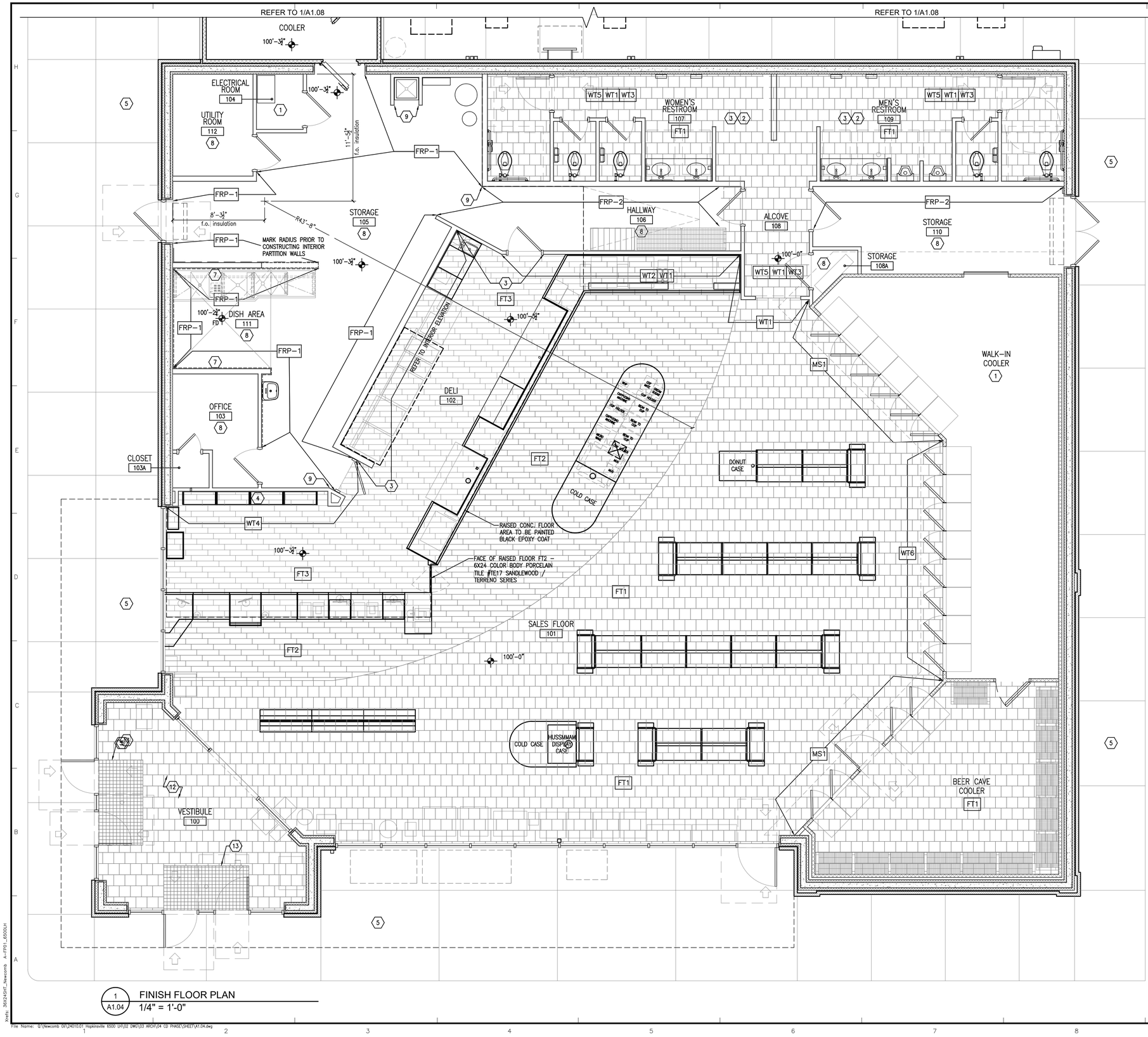

1 A1.04 FINISH FLOOR PLAN
1/4" = 1'-0"

GENERAL NOTES

A. REFER TO SHEET A1.01 'GENERAL NOTES'

B. REFER TO A3.04 FOR INTERIOR FINISH SCHEDULE

SHEET KEYNOTES

1. APPLY "MASTERKURE HD 200WB", ON FLOORS WHERE NOTED.
2. THROUGHOUT RESTROOM AREA, REFER TO INTERIOR ELEVATIONS FOR MORE INFORMATION.
3. REFER TO INTERIOR ELEVATIONS.
4. NO TILE BEHIND SHELVING.
5. APPLY "MASTERKURE ND 200WB" TO ALL EXTERIOR SIDEWALKS, EQUIPMENT PADS AND DUMPSTER PADS.
6. NOT USED
7. PAINT WALL PER INTERIOR FINISH SCHEDULE –SEE A3.04 FOR MORE INFORMATION
8. EPOXY COATED FLOORS, WHERE NOTED.
9. STAINLESS STEEL ANGLE TO PROTECT CORNER
10. FACE OF ½" RAISED CONCRETE SLAB WITH TILE WT5
11. PAINT WALL ABOVE MARRLITE –COLOR PER INTERIOR FINISH SCHEDULE –SEE A3.04 FOR MORE INFORMATION
12. ALL WALLS IN VESTIBULE WITH PAINT FINISH PT3
13. REFER TO KEYED NOTE 1/A1.02 FOR WALK-OFF GRATING AT DOOR
14. 5'-0"(H) STAINLESS STEEL PANELS W/ 5'-0"(H) FRP ABOVE.

FLOOR FINISH SCHEDULE

T-CODES = TILES USED ON FLOORS. WALL TILES MAY BE FOUND ON INTERIOR ELEVATIONS

EF1: EPOXY FLOOR

FT3: 6X6 PAVER 0Q96 CHARCOAL STD 0Q96661P W/ POLY BLEND PLUS LIGHT SMOKE GROUT

MAIN TILE FIELD A:

FT1: 12 x 12 PORCELAIN STONE TILE / #WL78 – ACCENT BROWN WITH 3/16" GROUT LINES – BRICKWORK PATTERN WITH #145 LIGHT SMOKE SANDED GROUT.

MAIN TILE FIELD B:

FT2: 6 X 24 COLORBODY PORCELAIN TILE / #HH03 TEAK WITH 3/16" GROUT LINES – WITH #59 SADDLE BROWN SANDED GROUT.

NOTE:
1. TILE TO RUN CONTINUOUS UNDER CABINETS.
2. "GROUT BOOST" TO BE USED TO MIX GROUT INSTEAD OF WATER.

CMW The Shape of Ideas
Architecture
Civil Engineering
Landscape Architecture
a: 249 East Main Street Suite 100 Lexington, Kentucky 40507
o: (859) 254-6623
w: www.cmwsec.com

BILL PICKERING REGISTERED No. 4915 COMMONWEALTH OF KENTUCKY ARCHITECT
31 MAY 2024

FINISH PLAN

FiveStar - #4460 Hopkinsville
NEWCOMB OIL CO., LLC
3070 PEMBROKE RD.
HOPKINSVILLE, KY 42240

CONSTRUCTION DOCUMENTS

Issue Date:	May 29, 2024
Drawn By:	JMT
Checked By:	BP
Revisions:	
	-
	-
	-
	-
	-
Mark	Date

AHJ SEAL

Project Number
24010.01

A1.04

File Name: Q:\Newcomb Oil\24010.01 Hopkinsville 6500 LH\02 DWG\03 ARCH\04 CD PHASE\SHEET\A1.04.dwg
PLOT DATE: Thursday, June 20, 2024 9:17:08 AM
Xrefs: 36X24SHT_Newcomb A-FP01_6500LH

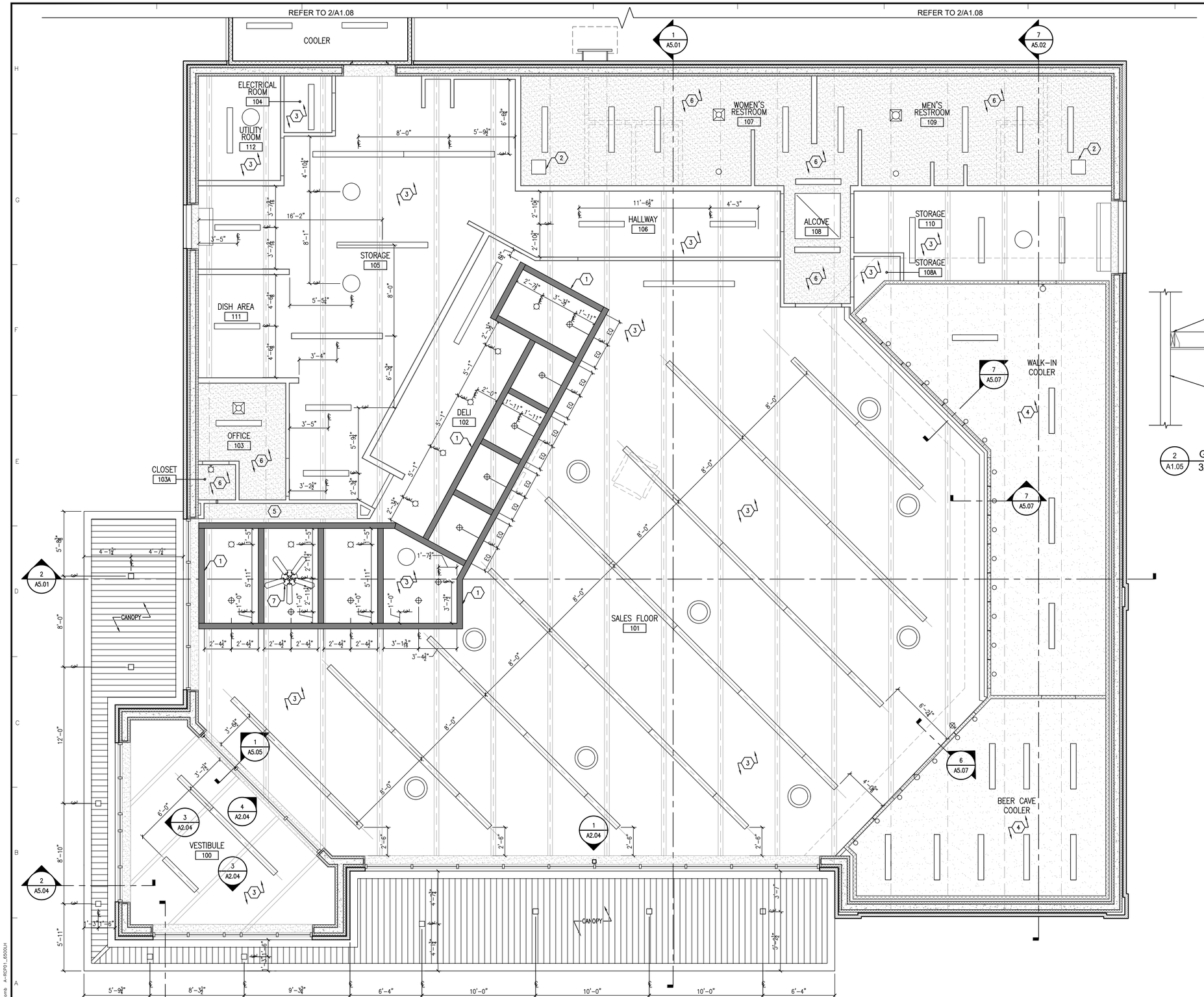

1 A1.05 REFLECTED CEILING PLAN
1/4" = 1'-0"

GENERAL NOTES

A. REFER TO SHEET A1.01 'GENERAL NOTES'
B. REFER TO A3.04 FOR INTERIOR FINISH SCHEDULE

SHEET KEYNOTES

1. CEDAR WOOD BEAMS: BEAMS SHALL BE SEALED WITH CLEAR SEALER, TOPS OF CEDAR BEAMS SHALL BE SANDED BEFORE INSTALLATION. SUSPENSION RODS SHALL BE PAINTED TO MATCH THE CEILING. STEEL CONNECTOR PLATES SHALL BE PAINTED BLACK. REFER TO STRUCTURAL DRAWINGS FOR STEEL CONNECTOR PLATES.
2. 24"x24" HIGH PLYWOOD DOOR WITH HINGES, HANDLE AND SLIDE BOLT TO ACCESS THE AREA ABOVE THE RESTROOM. TRIM WITH 1x TRIM, PAINT ALL.
3. OPEN TO STRUCTURE.
4. OPEN TO STRUCTURE ABOVE COOLERS.
5. GYPSUM BOARD CEILING @ 10'-0" A.F.F.
6. GYPSUM BOARD CEILING @ 9'-6" A.F.F.
7. CEILING FAN IN CASHIER AREA.

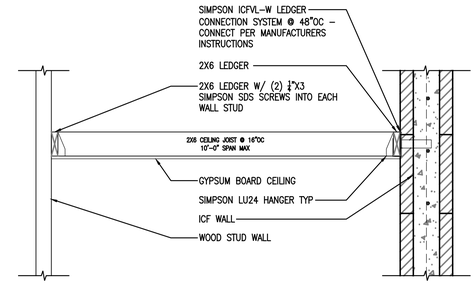

2 A1.05 GYPSUM BOARD CEILING FRAMING
3/4" = 1'-0"

CMW The Shape of Ideas
Architecture
Civil Engineering
Landscape Architecture
a: 249 East Main Street
Suite 100
Lexington, Kentucky 40507
o: (859) 254-6623
w: www.cmwaec.com

BILL PICKERING REGISTERED No. 4915 COMMONWEALTH OF KENTUCKY ARCHITECT
31 MAY 2024

REFLECTED CEILING PLAN
FiveStar - #4460 Hopkinsville
NEWCOMB OIL CO., LLC
3070 PEMBROKE RD.
HOPKINSVILLE, KY 42240

CONSTRUCTION DOCUMENTS

Issue Date:	May 29, 2024
Drawn By:	JMT
Checked By:	BP
Revisions:	
	-
	-
	-
	-
	-
Mark	Date

AHJ SEAL

Project Number
24010.01

A1.05

Xrefs: 36X24SHT_Newcomb A-RCP01_6500LH
File Name: Q:\Newcomb Oil\24010.01 Hopkinsville 6500 LH\02 DWG\03 ARCH\04 CD PHASE\SHEET\A1.05.dwg
PLOT DATE: Tuesday, May 28, 2024 10:26:04 AM

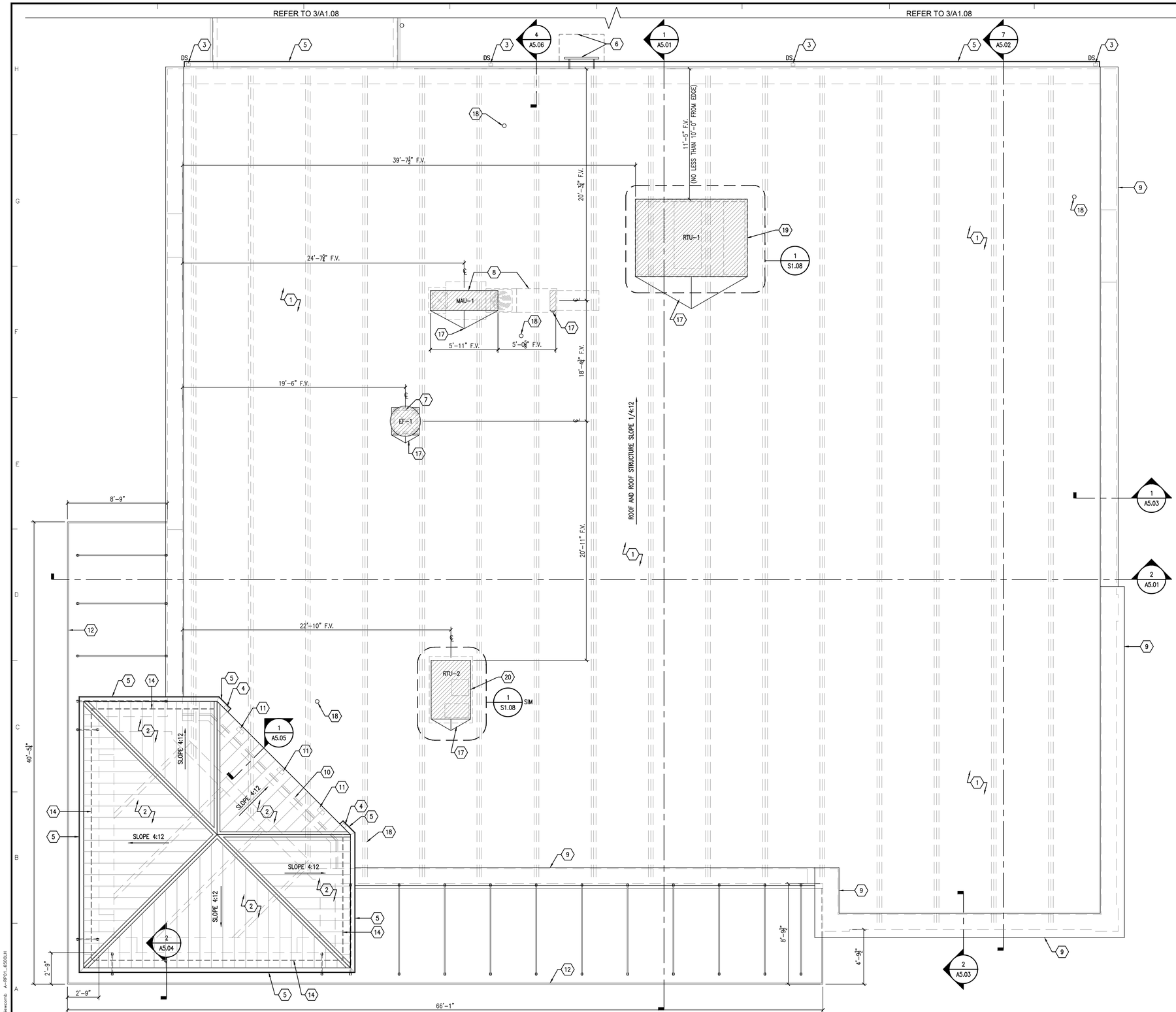

1 A1.06 ROOF PLAN
1/4" = 1'-0"

GENERAL NOTES

A. REFER TO SHEET A1.01 'GENERAL NOTES'

B. ROOF DESIGN MINIMUM R-VALUE:R-30. PROVIDE ROOF INSULATION TO MEET MINIMUM DESIGN R-VALUE. ROOF INSULATION INSTALLED IN TWO LAYERS WITH BOARD JOINTS STAGGERED BETWEEN LAYERS

C. REFER TO M/P/E DRAWINGS FOR ADDITIONAL NOTES FOR M/P/E ROOF WORK.

D. COORDINATE MECHANICAL EQUIPMENT LOCATIONS INCLUDING CURBS AND OPENINGS IN ROOF DECK WITH MECHANICA EQUIPMENT REQUIREMENTS. DIMENSIONS SHOWN ON THIS ROOF PLAN LOCATING ROOFTOP MECHANINCAL EQUIPMENT ARE TO FACE OF EQUIPMENT CURB

E. USE GUTTER SEALANT "GEOCELL 2315LRF". WWW.GEOCELLUSA.COM. INSTALL PER MANUFACTURER'S RECOMMENDATIONS. ALL JOINTS, BULGES, CRACKS AND SEAMS SHALL TO BE LESS THAN 1/4". REINFORCING MESH NOT REQUIRED.

F. GUTTER SEGMENTS MUST LAP A MINIMUM OF 3".

G. GUTTERS SHALL BE TESTED FOR LEAKS BY DAMMING ALL DOWNSPOUTS AND FILLING GUTTERS WITH 2" (APPROXIMATE DEPTH) OF WATER AND HOLD WITHOUT LEAKAGE. ANY LEAK LOCATIONS SHALL BE CORRECTED TO ELIMINATE THE LEAK BY PROPER SEALING PER SMACNA STANDARDS OR GUTTER SECTION REPLACED IF LEAK CANNOT BE PROPERLY SEALED .

SHEET KEYNOTES

1. SINGLE PLY PVC 60 MIL. FULLY ADHERED ROOF MEMBRANE – WHITE. BASIS-OF-DESIGN: DURO-LAST (WITH SUPREME 15-YEAR NDL WARRANTY) OR APPROVED EQUAL.
2. 1.5"(H) 24-GAUGE MINI BATTEN PREFINISHED STANDING SEAM METAL ROOF BY 'METAL SALES' W/ KYNAR FINISH (COLOR: PATRIOT RED, CONFIRM FINAL COLOR WITH OWNER) OVER 30# FELT (40 MIL MIN. THICKNESS SELF-ADHERING MEMBRANE MAY BE USED IN PLACE OF FELT) OVER ROOF SHEATHING.

   NOTE: PROVIDE LINEAR SOFFIT VENTS ON NON-ROOF SIDES: ON ROOF SIDE, PROVIDE (2) RECT. ALUMINUM SOFFIT VENTS, PTD.TO MATCH ADJACENT METAL COLOR.
3. PREFINISHED METAL DOWNSPOUTS –SEE ELEVATIONS AND DETAILS FOR ADDITIONAL INFORMATION. ROUTE ALL DOWNSPOUTS BELOW GRADE – REFER TO CIVIL FOR ADDITIONAL INFORMATION.
4. PREFINISHED METAL DOWNSPOUTS –SEE ELEVATIONS AND DETAILS FOR ADDITIONAL INFORMATION. DRAIN DOWNSPOUTS TO TPO ROOF SYSTEM BELOW
5. CONTINUOUS PREFINISHED METAL GUTTER –SEE ENLARGED DETAILS FOR STYLE AND COLOR
6. GALV STEEL ROOF LADDER W/ SAFETY CAGE. PROVIDE 6'-0" (H) HINGED SECURITY PANEL W/ PADLOCK HASP. CONFIRM ACCESS LADDER TO BE USED WITH OWNER.

   NOTE: BRACKETS ARE ANCHORED DIRECTLY TO CONCRETE WALL –SEE NOTES AND DETAIL 01/A5.04 FOR REQ'D – LENGTH TO CLEAR GUTTER
7. EXHAUST FAN (250 LBS) FOR HOOD BELOW –WITH 21"x21" ROOF DECK OPENING –REFER TO MECHANICAL DRAWINGS –NOTE BELOW ROOF IS HOOD (550 LBS) INSTALLED SUSPENDED FROM ROOF STRUCTURE –REFER TO STRUTURAL FOR CURB SUPPORT AND OPENING IN ROOF DECK –COORDINATE CURB SUPPORT AND DECK OPENING WITH MECHANICAL
8. MAKE-UP AIR UNIT (1,400 LBS) –REFER TO MEP DRAWINGS
9. 24-GAUGE PREFINISHED METAL PARAPET COPING CAP – SEE EXT FINISH SCHEDULE FOR COLOR SELECTION
10. 2X6 WOOD STUD FRAMING INFILL WALL W/ STUDS SPACED 16"OC, ½"(T) SHEATHING, AND PREFINISHED METAL PANEL VENEER –SEE WALL SECTION DETAIL 1-A5.05 FOR ADDITIONAL INFORMATION
11. 4"X8" RECTANGULAR SOFFIT VENT –CONFIRM QUANTITY WITH AHJ VENTILATION REQUIREMENTS
12. METAL CANOPY W/ INTEGRAL GUTTER –REFER TO EXT ELEVATIONS FOR DOWNSPOUT LOCATIONS
13. NOT USED
14. CONTINUOUS LINEAR SOFFIT VENT (DENOTED BY HEAVY DASHED LINE) –SEE ENLARGED DETAILS FOR ADDITIONAL INFORMATION
15. 2X4 WOOD STUD KNEE WALL W/ STUDS SPACED @ 48"OC @ ROOF JOIST MIDSPAN –(2) SIDES OF HIP ROOF (TO SUPPORT ROOF JOISTS)
16. NOT USED
17. ROOF INSULATION CRICKET –PROVIDE CRICKET AT ALL ROOFTOP EQUIPMENT CURBS
18. PLUMBING VENT –PROVIDE PREFABRICATED VENT BOOT FLASHING COMPATIBLE WITH ROOFING –REFER TO PLUMBING FOR EXACT QUANTITY AND LOCATIONS OF PLUMBING VENTS THROUGH ROOF
19. 15 TON RTU-1 (2,600 LBS) –REFER TO MECHANICAL DRAWINGS –PROVIDE 117-1/4" X 81" OPENING IN ROOFING FOR CURB –REFER TO STRUCTURAL FOR CURB SUPPORT AND OPENINGS IN ROOF DECK – COORDINATE WITH MECHANICAL FOR MECHANICAL EQUIPMENT REQUIREMENTS FOR CURB SUPPORT AND DECK OPENINGS
20. 5 TON RTU-2 (800 LBS) –REFER TO MECHANICAL DRAWINGS –PROVIDE 61" X 37" OPENING IN ROOFING FOR CURB –REFER TO STRUCTURAL FOR CURB SUPPORT AND OPENINGS IN ROOF DECK –COORDINATE WITH MECHANICAL FOR MECHANICAL EQUIPMENT REQUIREMENTS FOR CURB SUPPORT AND DECK OPENINGS

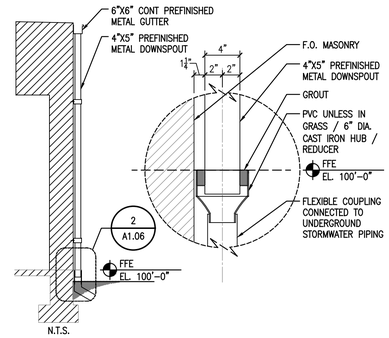

2 A1.06 DOWNSPOUT DETAIL
1 1/2" = 1'-0"

CMW The Shape of Ideas
Architecture
Civil Engineering
Landscape Architecture
a: 249 East Main Street
Suite 100
Lexington, Kentucky 40507
o: (859) 254-6623
w: www.cmwsec.com

BILL PICKERING REGISTERED No. 4915 COMMONWEALTH OF KENTUCKY ARCHITECT
31 MAY 2024

ROOF PLAN

FiveStar - #4460 Hopkinsville
NEWCOMB OIL CO., LLC
3070 PEMBROKE RD.
HOPKINSVILLE, KY 42240

CONSTRUCTION DOCUMENTS

Issue Date:	May 29, 2024
Drawn By:	JMT
Checked By:	BP

Revisions:	
	-
	-
	-
	-
	-
Mark	Date

AHJ SEAL

Project Number
24010.01

A1.06

Xrefs: 36X24SHT_Newcomb A-RP01_6500LH
File Name: Q:\Newcomb Oil\24010.01 Hopkinsville 6500 LH\02 DWG\03 ARCH\04 CD PHASE\SHEET\A1.06.dwg
PLOT DATE: Thursday, June 20, 2024 9:18:49 AM

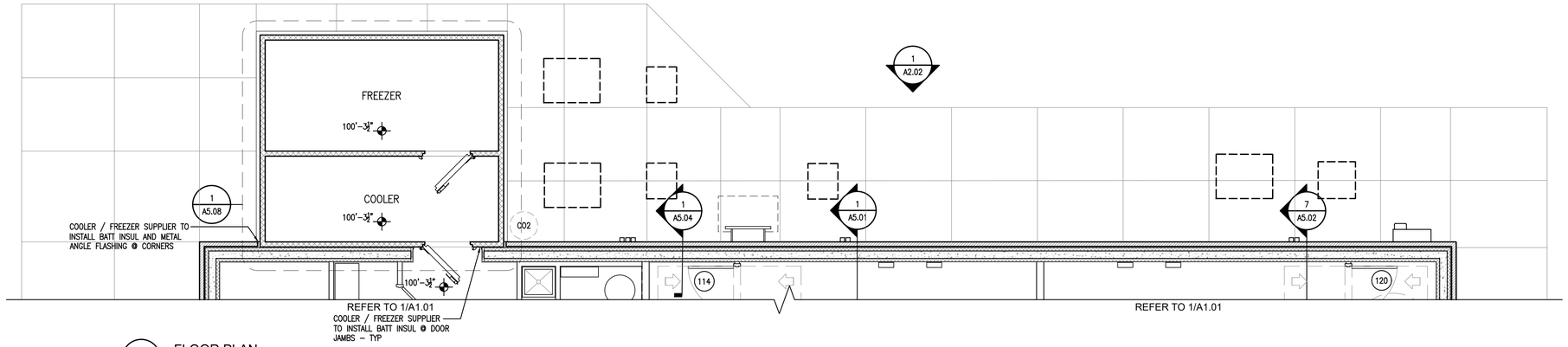

1 A1.07 FLOOR PLAN
1/4" = 1'-0"

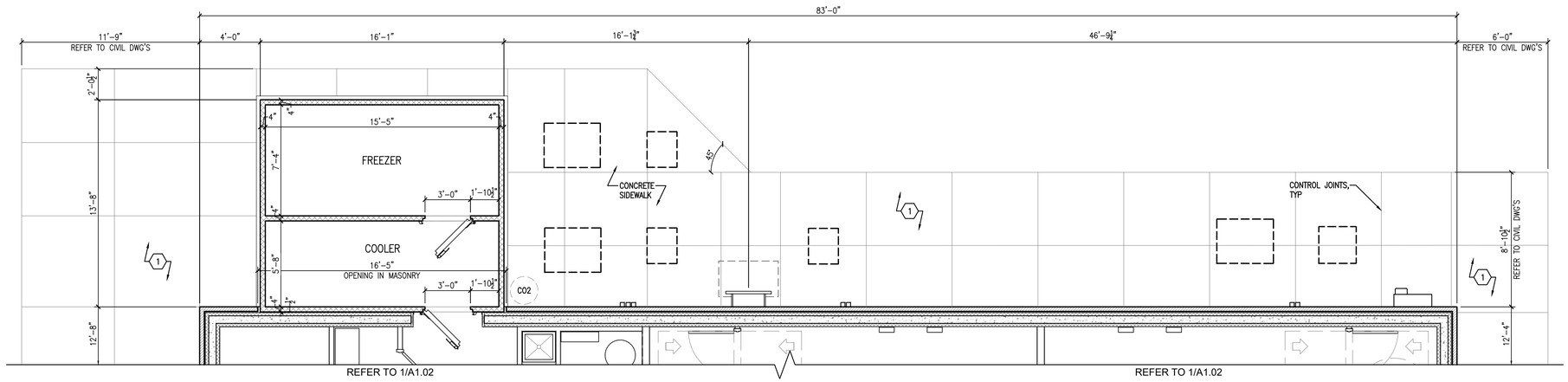

2 A1.07 DIMENSIONED FLOOR PLAN
1/4" = 1'-0"

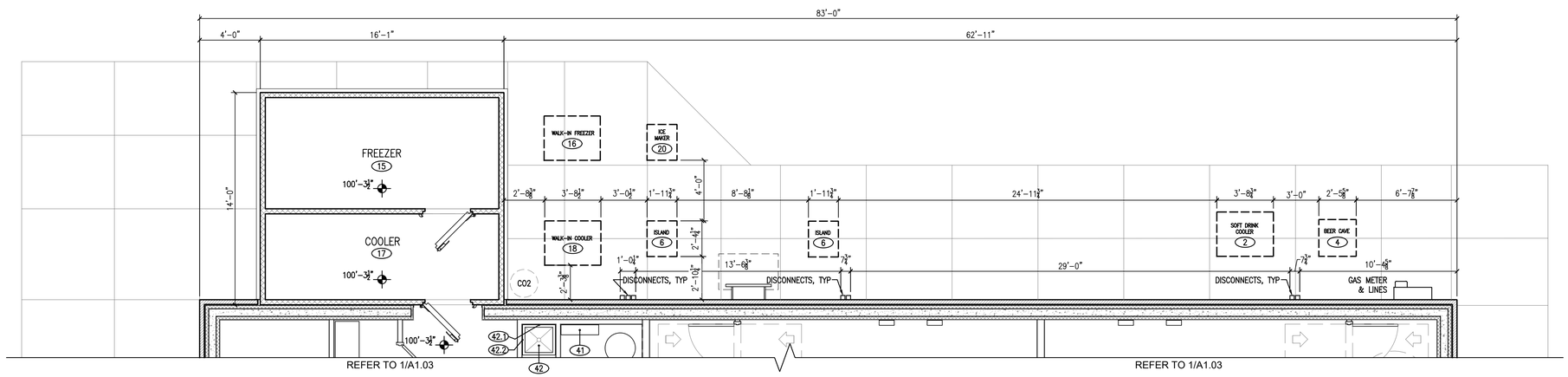

3 A1.07 EQUIPMENT AND CASEWORK PLAN
1/4" = 1'-0"

GENERAL NOTES

A. REFER TO SHEET A1.01 'GENERAL NOTES'
B. REFER TO SHEET A1.01 'WALL/PARTITION LEGEND'
C. REFER TO SHEET A1.03 'EQUIPMENT SCHEDULE'
D. SEE CIVIL DRAWINGS FOR BOLLARD LOCATIONS AROUND THE BUILDING. SEE DETAIL 02/A5.02 FOR BOLLARD DETAIL.
E. REVIEW CIVIL DRAWINGS BEFORE FORMING OUTSIDE SIDEWALKS –AND REVIEW SITE FOR CANOPY SIZE

SHEET KEYNOTES

1. REVIEW CIVIL DRAWINGS BEFORE FORMING OUTSIDE SIDEWALKS, & REVIEW SITE FOR CANOPY SIZE.

CMW
The Shape of Ideas
Architecture
Civil Engineering
Landscape Architecture
a: 249 East Main Street
Suite 100
Lexington, Kentucky 40507
o: (859) 254-6623
w: www.cmwaec.com

BILL PICKERING
REGISTERED
No. 4915
COMMONWEALTH OF KENTUCKY
ARCHITECT
31 MAY 2024

NORTH WALL COOLER / FREEZER PLANS

FiveStar - #4460 Hopkinsville
NEWCOMB OIL CO., LLC
3070 PEMBROKE RD.
HOPKINSVILLE, KY 42240

CONSTRUCTION DOCUMENTS

Issue Date:	May 29, 2024
Drawn By:	JMT
Checked By:	BP
Revisions:	
	-
	-
	-
	-
	-
Mark	Date

AHJ SEAL

Project Number
24010.01

A1.07

Xrefs: 36X24SHT_Newcomb A-FP01_6500LH
File Name: Q:\Newcomb Oil\24010.01 Hopkinsville 6500 LH\02 DWG\03 ARCH\04 CD PHASE\SHEET\A1.07.dwg
PLOT DATE: Tuesday, May 28, 2024 10:27:03 AM

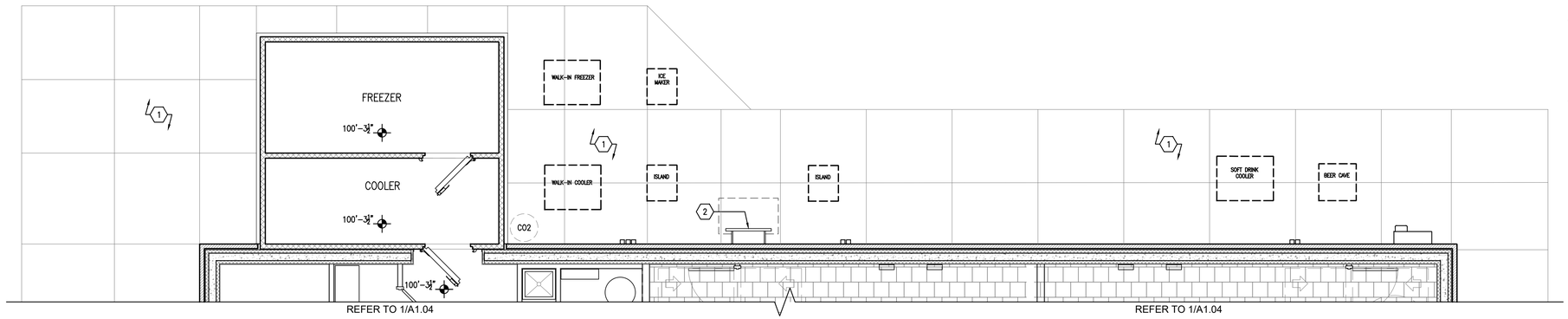

1 A1.08 FINISH PLAN
1/4" = 1'-0"

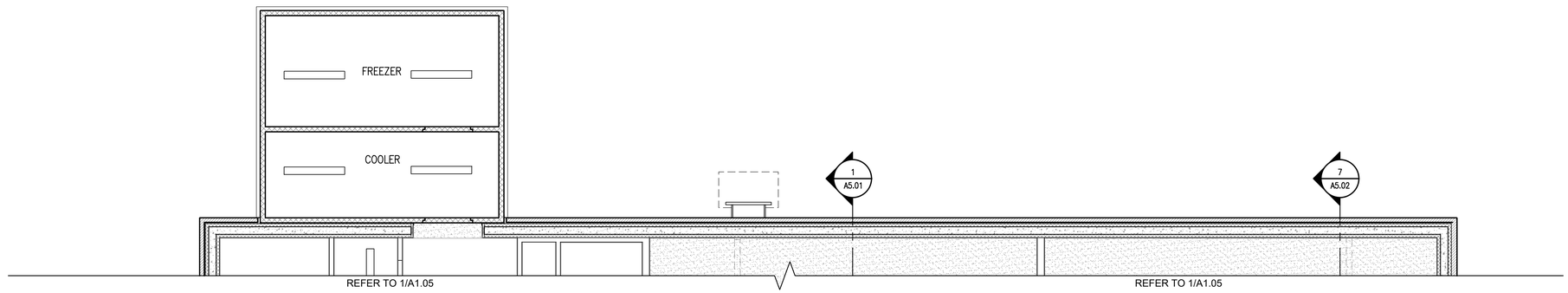

2 A1.08 REFLECTED CEILING PLAN
1/4" = 1'-0"

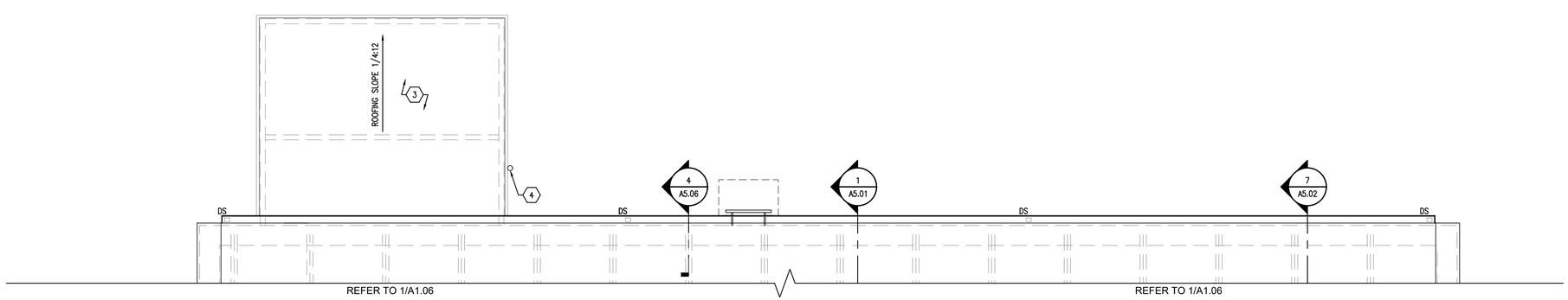

3 A1.08 ROOF PLAN
1/4" = 1'-0"

GENERAL NOTES

A. REFER TO SHEET A1.06 'GENERAL NOTES'

B. REFER TO A3.04 FOR 'INTERIOR FINISH SCHEDULE'

SHEET KEYNOTES ⬡

1. APPLY "MASTERKURE ND 200WB" TO ALL EXTERIOR SIDEWALKS, EQUIPMENT PADS AND DUMPSTER PADS.
2. PAINT ROOF LADDER.
3. SINGLE PLY MEMBRANE ROOF SYSTEM WITH COVER BOARD OVER TAPERED AND UNIFORM THICKNESS INSULAITON INSTALLED OVER COOLER/FREEZER ASSEMBLY –TAPERED INSULAITON SLOPED AT MINIMUM ¼:12 –ROOFING MEMBRANE EXTENDED UP BRICK VENEER AND FINISHED WITH SEALED TERMINATION BAR –REFER TO DETAILS 2 & 4/A5.08
4. VENT PIPE FROM UNDER-SLAB DRAINAGE PIPING UNDER COOLER/FREEZER ASSEMBLY –REFER TO ENLARGED PLAN 1/A5.08

CMW The Shape of Ideas
Architecture
Civil Engineering
Landscape Architecture
a: 249 East Main Street
Suite 100
Lexington, Kentucky 40507
o: (859) 254-6623
w: www.cmwsec.com

BILL PICKERING REGISTERED No. 4915 COMMONWEALTH OF KENTUCKY ARCHITECT
31 MAY 2024

NORTH WALL COOLER / FREEZER PLANS

FiveStar - #4460 Hopkinsville
NEWCOMB OIL CO., LLC
3070 PEMBROKE RD.
HOPKINSVILLE, KY 42240

CONSTRUCTION DOCUMENTS

Issue Date:	May 29, 2024
Drawn By:	JMT
Checked By:	BP
Revisions:	
	-
	-
	-
	-
	-
Mark	Date

AHJ SEAL

Project Number
24010.01

A1.08

File Name: Q:\Newcomb Oil\24010.01 Hopkinsville 6500 LH\02 DWG\03 ARCH\04 CD PHASE\SHEET\A1.08.dwg
PLOT DATE: Tuesday, May 28, 2024 10:27:32 AM
Xrefs: 36X24INT_Newcomb A-FP01_6500LH A-RCP01_6500LH A-RP01_6500LH

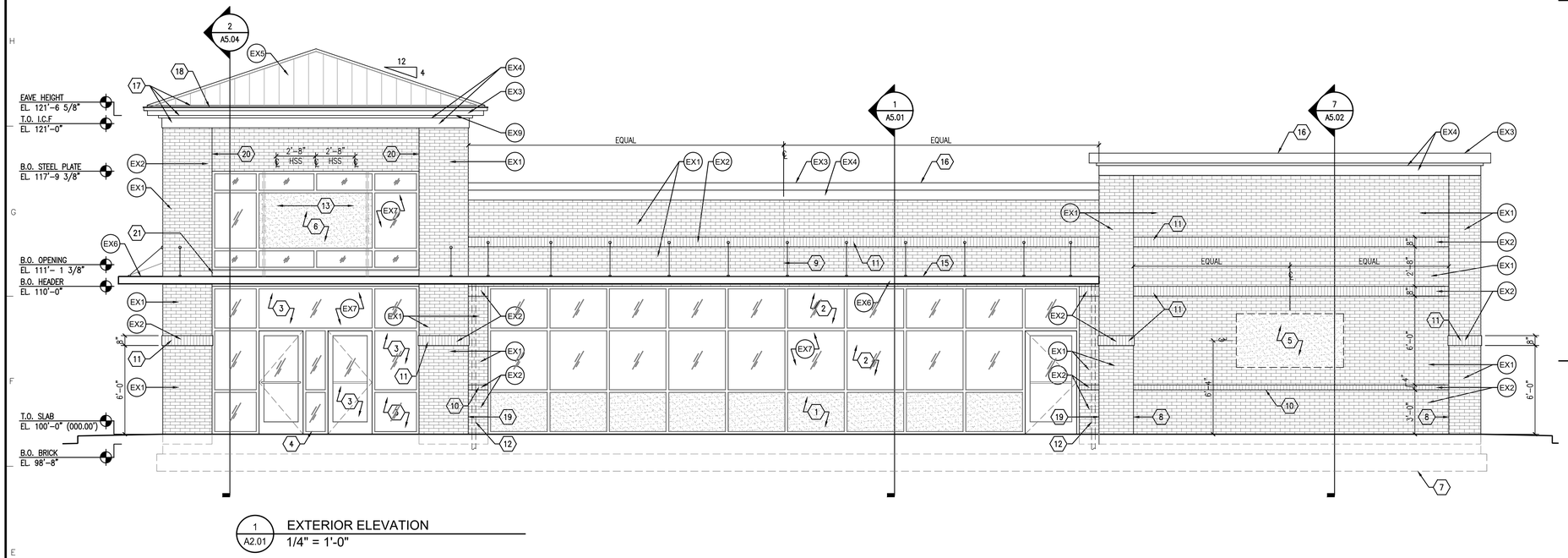

1 A2.01 EXTERIOR ELEVATION
1/4" = 1'-0"

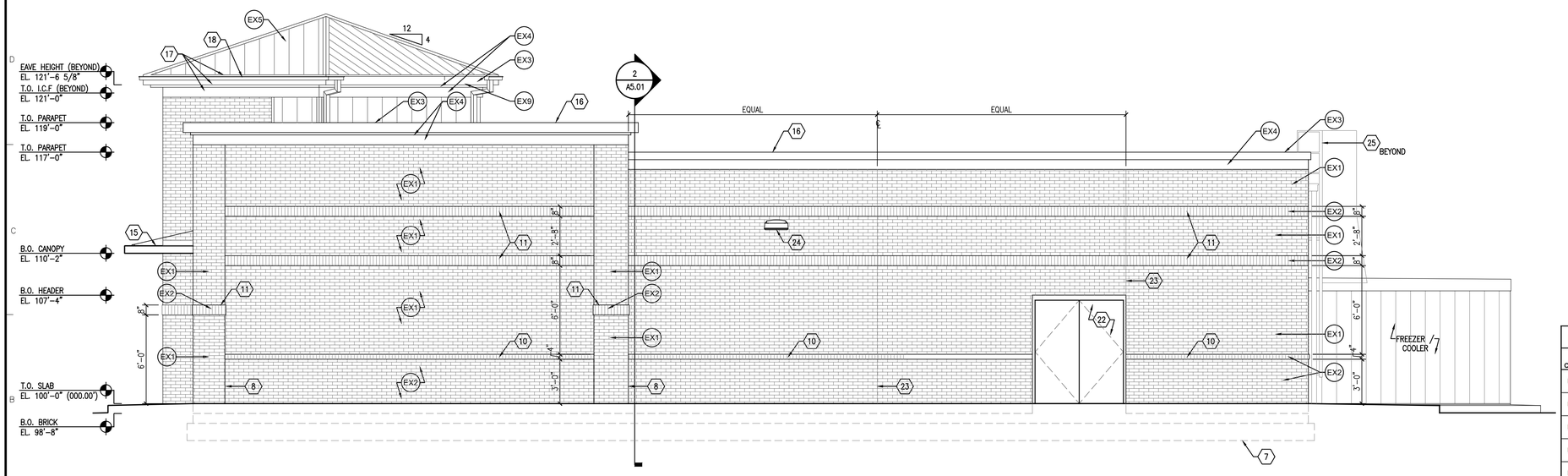

2 A2.01 EXTERIOR ELEVATION
1/4" = 1'-0"

GENERAL NOTES

A. REFER TO SHEET A1.01 'GENERAL NOTES'

B. PROVIDE MATERIAL COLOR & FINISH SAMPLES FOR APPROVAL (BY OWNER)

C. PROVIDE LOW WEEP VENTS IN VENEER MASONRY, 24" O.C. MAX. USE 3/8" HONEYCOMB VENT

D. MASONRY EXPANSION JOINTS: PROVIDE SANDED SEALANT (MATCH MORTAR) W/ COMPRESSIBLE BACKER. SEALANT TO COMPLY W/ ASTM C290, CLASS 50 SPECIFICATIONS.

E. SIGNAGE: COORDINATE SIGN SIZE, POWER REQUIREMENTS, AND LAYOUT WITH SUPPLIER PRIOR TO INSTALLATION OF STOREFRONT.

F. CANOPY: REFER TO STRUCTURAL FOR REQUIRED LOADING. CANOPY & DOWNSPOUTS SHOWN FOR REFERENCE. FINAL DESIGN & DETAILING BY CANOPY SUPPLIER. SUBMIT TO OWNER FOR APPROVAL.

G. ALL DOWNSPOUTS TO BE SLEEVED AND ROUTED BELOW GRADE. COORDINATE WITH CIVIL FOR COLLECTION AND MANAGEMENT OF WATER ON SITE.

H. GUTTERS SHALL BE TESTED FOR LEAKS BY DAMMING ALL DOWNSPOUTS AND FILLING GUTTERS WITH 2" (APPROX.) OF WATER.

I. REFER TO FINISH SCHEDULE FOR HM DOOR AND FRAME PAINT COLORS.

J. BOTTOM ALUMINUM SILL SHALL MEASURE 4-13/16" INSTEAD OF 2-1/4". THIS IS TO ALLOW THE TILE ON THE RAISED FLOOR TO BUTT UP AGAINST THE SILL INSTEAD OF HAVING A TILE/GAP ISSUE.

ALUMINUM STOREFRONT: AS MANUFACTURED BY TRULITE:

2" X 4-1/2" THERMALLY BROKEN, DARK BRONZE ANODIZED, CENTER GLAZED

INUSULATED GLASS: 1" INSULATED, SOLAR BRONZE, (HEAT STRENGTHENED) OVER "GUARDIAN SUNGUARD SN-68". FULLY TEMPERED BOTH LIGHTS AS REQUIRED BY CODE.

INSULATED PANELS: 1" INSULATED, DARK BRONZE, "CITADEL GLAZEGUARD 1000 WR", • PRE-FINISHED TEXTURED ALUMINUM SKINS .010", HIGH DENSITY POLYPROPYLENE STABILIZERS, EXPANDED POLYSTYRENE FOAM (EPS) CORE 5/8"

SHEET KEYNOTES

1. 1"(T) INSULATED METAL PANELS WITH FLUSH GLAZING
2. 1"(T) INSULATED GLASS IN ALUMINUM FRAME WITH FLUSH GLAZING
3. 1"(T) INSULATED GLASS IN ALUMINUM FRAME WITH FLUSH GLAZING – TEMPER GLAZING IN DOORS & ADJACENT STOREFRONT PER CODE – TYP
4. REMOVABLE CENTER GLASS AND ALUMINUM FRAMES – REFER TO A-601
5. 'FIVE STAR' WALL MOUNTED SIGN, PROVIDED BY OWNER (OFCI) – SIGN IS INTERNALLY LIT – REFER TO ELECTRICAL
6. METAL CLAD INFILL PANEL W/ 3/4" EXT. GRADE PLYWOOD CORE FOR MOUNTING OF OWNER SUPPLIED SIGN – COORDINATE WITH SIGN SUPPLIER AND OWNER. SIGN IS INTERNALLY LIT – SEE ELECTRICAL FOR POWER REQUIREMENTS
7. CONCRETE FOOTING/FOUNDATION – REFER TO STRUCTURAL
8. MASONRY CONTROL JOINT AT OFFSET IN WALL
9. MASONRY CONTROL JOINT – ALIGN W/ SOLDIER COURSE(S). NO CUT BRICKS IN SOLDIER COURSES – TYP
10. ROWLOCK BRICK COURSE
11. SOLDIER BRICK COURSE – PROJECT 1/2" PAST ADJACENT FACE OF BRICK – TYP
12. PREFINISHED METAL DOWNSPOUT – TYP. PROVIDE SLEEVE & PIPE BELOW GRADE (REFER TO CIVIL FOR COLLECTION & ROUTING). COORDINATE SIZE AND LOCATIONS OF DOWNSPOUTS WITH CANOPY SUPPLIER.
13. HSS 3X2X1/4" BEHIND STOREFRONT SYSTEM – REFER TO SECTION
14. 6" DIA REFRIGERANT LINE SLEEVE PENETRATION – CAULK/SEAL PERIMETER – SEE SHT. P2.02
15. PREFINISHED / PREFABRICATED METAL CANOPY SYSTEM
16. PREFINISHED METAL PARAPET CAP & FASCIA
17. PREFINISHED METAL EAVE, SOFFIT & FASCIA
18. PREFINISHED METAL GUTTER
19. MASONRY CONTROL JOINT AT INSIDE CORNER
20. MASONRY CONTROL JOINT AT CHANGE IN PLANE
21. METAL CLAD FASCIA BEHIND CANOPY – COLOR TO MATCH STOREFRONT – REFER TO WALL SECTION
22. GALVANIZED HOLLOW METAL DOOR(S) AND FRAME – PAINT
23. MASONRY CONTROL JOINT
24. WALL-MOUNTED LIGHT FIXTURE – REFER TO ELECTRICAL DRAWINGS
25. GALV STEEL ROOF LADDER W/ SAFETY CAGE. PROVIDE 6'-0" (H) HINGED SECURITY PANEL W/ PADLOCK HASP. CONFIRM ACCESS LADDER TO BE USED WITH OWNER. NOTE: BRACKETS ARE ANCHORED DIRECTLY TO CONCRETE WALL, SEE NOTES AND DETAIL 01/A5.04 FOR REQ'D – LENGTH TO CLEAR GUTTER
26. 2" DIA GAS PIPE PENETRATION – CAULK/SEAL PERIMETER – SEE SHT. P2.02
27. 10" DIA RESTROOM EXHAUST FAN PENETRATION – CAULK/SEAL PERIMETER – SEE SHT. M2.01
28. 5.5" DIA WATER HEATER VENT/COMBUSTION PIPE PENETRATION – CAULK/SEAL PERIMETER – SEE SHT. M2.01
29. 4" DIA PENETRATION – LOCATE BEHIND MECH EQUIPMENT (BELOW)
30. 3" DIA SANITARY PIPE PENETRATION – CAULK/SEAL PERIMETER – SEE SHT P2.01A
31. 4" DIA SANITARY PIPE PENETRATION – CAULK/SEAL PERIMETER – SEE SHT P2.01A
32. 1" DIA ELECTRICAL PIPE PENETRATION – CAULK/SEAL PERIMETER – SEE ELECT
33. 4" DIA GAS PIPE PENETRATION – CAULK/SEAL PERIMETER
34. 4" DIA PIPE PENETRATION FOR CO2 LINE – CAULK/SEAL PERIMETER – COORDINATE INSTALLATION WITH EQUIPMENT SUPPLIER/INSTALLER

EXTERIOR FINISH SCHEDULE

CODE	DESCRIPTION	COLOR / TYPE	MANUFACTURER NOTES
EX1	EXTERIOR BRICK	COLOR: CHARLESTON WELLINGTON	SIOUX CITY
		TYPE: MODULAR BRICK	
EX2	EXTERIOR BRICK	COLOR: WHITE PLAINS	SIOUX CITY
		TYPE: MODULAR BRICK	
EX3	METAL PARAPET CAP	COLOR: PATRIOT RED (METALLIC)	METAL SALES
		TYPE: 24GA KYNAR FINISH	
EX4	METAL PARAPET CAP	COLOR: MYSTIC PLUS	METAL SALES
		TYPE: 24GA KYNAR FINISH	
EX5	METAL ROOF 'TEE PANEL' STANDING SEAM ROOF	COLOR: PATRIOT RED (METALLIC)	METAL SALES
		TYPE: 24GA KYNAR FINISH	
EX6	METAL ROOF	COLOR: PATRIOT RED (METALLIC)	TENNESSEE VALLEY METALS
	DECKING & D.S.(GRAY)	COLOR: MYSTIC PLUS	GALVANIZED
EX7	ALUMINUM STOREFRONT	SEE A2.01 GENERAL NOTES	
EX8	ALUMINUM STOREFRONT	SEE A2.01 GENERAL NOTE 9	
EX9	SOFFIT PANEL	COLOR: GR50-KYNAR LINEN WHITE	METAL SALES
		TYPE: V-GROOVE 12 (26GA)	
	GLAZING	SEE A2.01 GENERAL NOTES	
	INSULATED METAL PANEL	SEE A2.01 GENERAL NOTES	

CMW The Shape of Ideas
Architecture
Civil Engineering
Landscape Architecture
a: 249 East Main Street
Suite 100
Lexington, Kentucky 40507
o: (859) 254-6623
w: www.cmwsec.com

BILL PICKERING REGISTERED No. 4915 COMMONWEALTH OF KENTUCKY ARCHITECT
31 MAY 2024

EXTERIOR ELEVATIONS

FiveStar - #4460 Hopkinsville
NEWCOMB OIL CO., LLC
3070 PEMBROKE RD.
HOPKINSVILLE, KY 42240

CONSTRUCTION DOCUMENTS

Issue Date:	May 29, 2024
Drawn By:	JMT
Checked By:	BP
Revisions:	
	-
	-
	-
	-
	-
Mark	Date

AHJ SEAL

Project Number
24010.01

A2.01

Xrefs: A-ELEV1_6500LH A-ELEV2_6500LH 36X24INT_Newcomb
File Name: Q:\Newcomb Oil\24010.01 Hopkinsville 6500 LH\02 DWG\03 ARCH\04 CD PHASE\SHEET\A2.01.dwg
PLOT DATE: Friday, June 21, 2024 12:53:04 PM

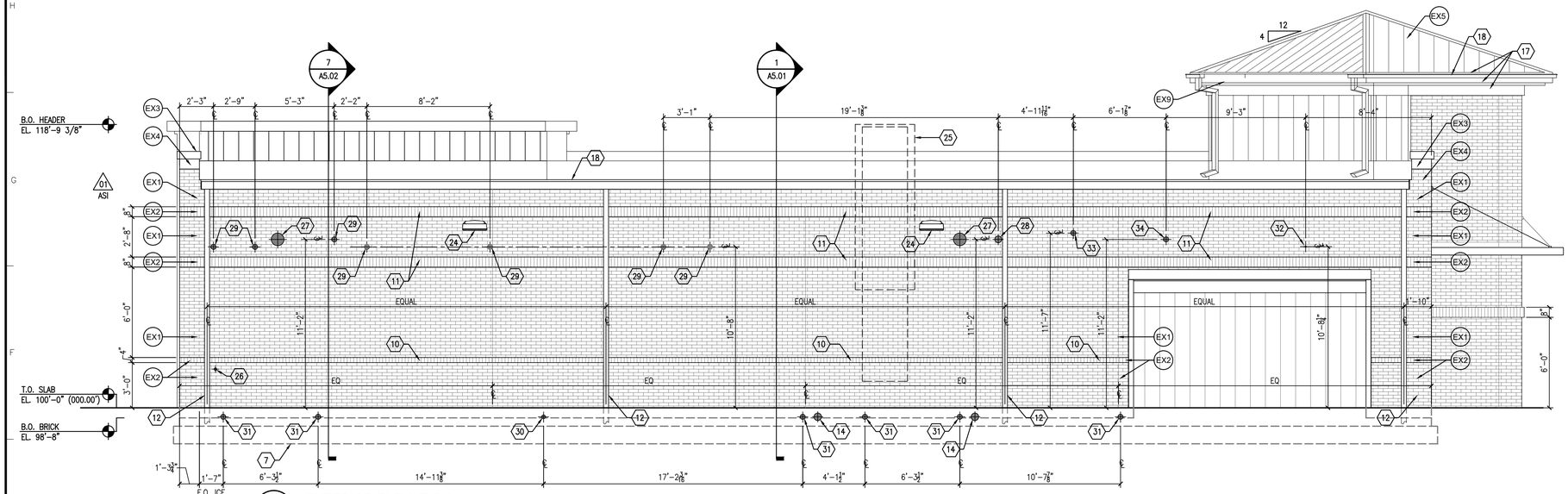

1 A2.02 EXTERIOR ELEVATION
1/4" = 1'-0"

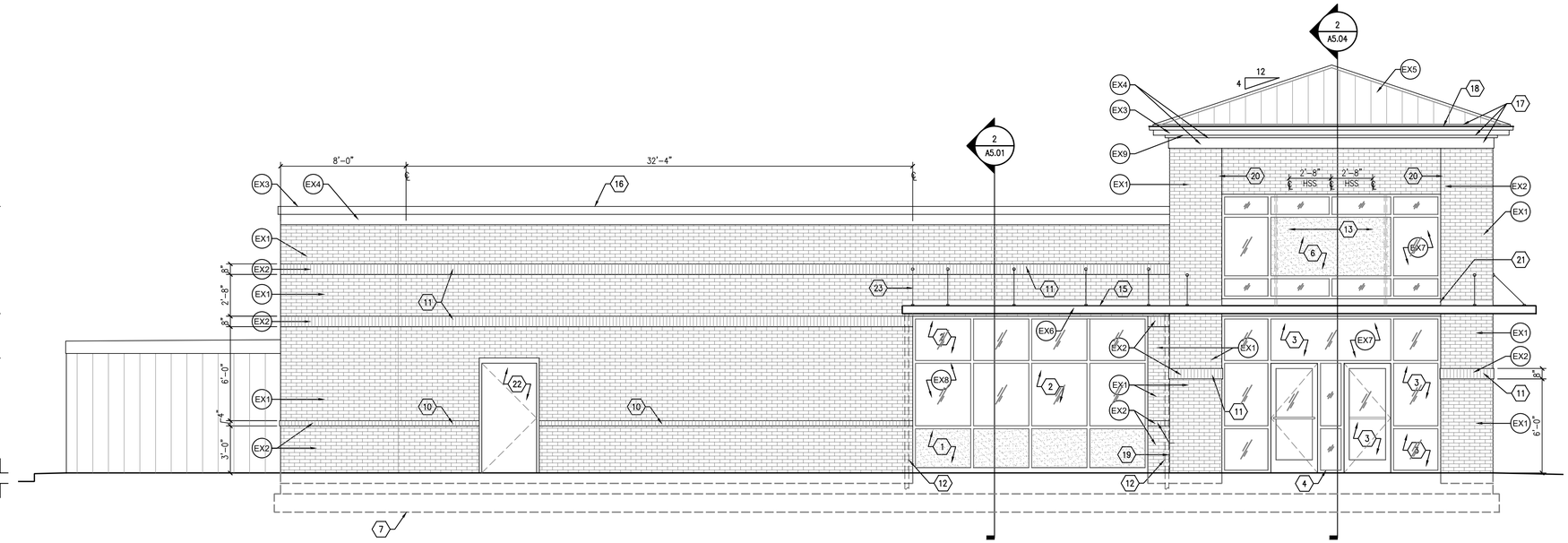

2 A2.02 EXTERIOR ELEVATION
1/4" = 1'-0"

GENERAL NOTES

A. REFER TO SHEETS A1.01 AND A2.01 "GENERAL NOTES"

B. REFER TO SHEET A2.01 "EXTERIOR FINISH SCHEDULE"

SHEET KEYNOTES ⬡

REFER TO SHEET A2.01 "SHEET KEYNOTES"

EXTERIOR FINISH SCHEDULE

REFER TO SHEET A2.01 "EXTERIOR FINISH SCHEDULE"

CMW
The Shape of Ideas
Architecture
Civil Engineering
Landscape Architecture
a: 249 East Main Street
Suite 100
Lexington, Kentucky 40507
o: (859) 254-6623
w: www.cmwsec.com

BILL PICKERING
REGISTERED
No. 4915
COMMONWEALTH OF KENTUCKY
ARCHITECT
31 MAY 2024

EXTERIOR ELEVATIONS

FiveStar - #4460 Hopkinsville
NEWCOMB OIL CO., LLC
3070 PEMBROKE RD.
HOPKINSVILLE, KY 42240

CONSTRUCTION DOCUMENTS

Issue Date:	May 29, 2024
Drawn By:	JMT
Checked By:	BP
Revisions:	
	-
	-
	-
	-
	-
Mark	Date

AHJ SEAL

Project Number
24010.01

A2.02

XRefs: 36X24SHT_Newcomb A-ELEV03_6500LH A-ELEV04_6500LH
File Name: Q:\Newcomb Oil\24010.01 Hopkinsville 6500 LH\02 DWG\03 ARCH\04 CD PHASE\SHEET\A2.02.dwg
PLOT DATE: Friday, June 21, 2024 12:51:30 PM

GENERAL NOTES

A. REFER TO SHEETS A1.01 AND A2.01 'GENERAL NOTES'

B. REFER TO SHEET A2.01 'EXTERIOR FINISH SCHEDULE'

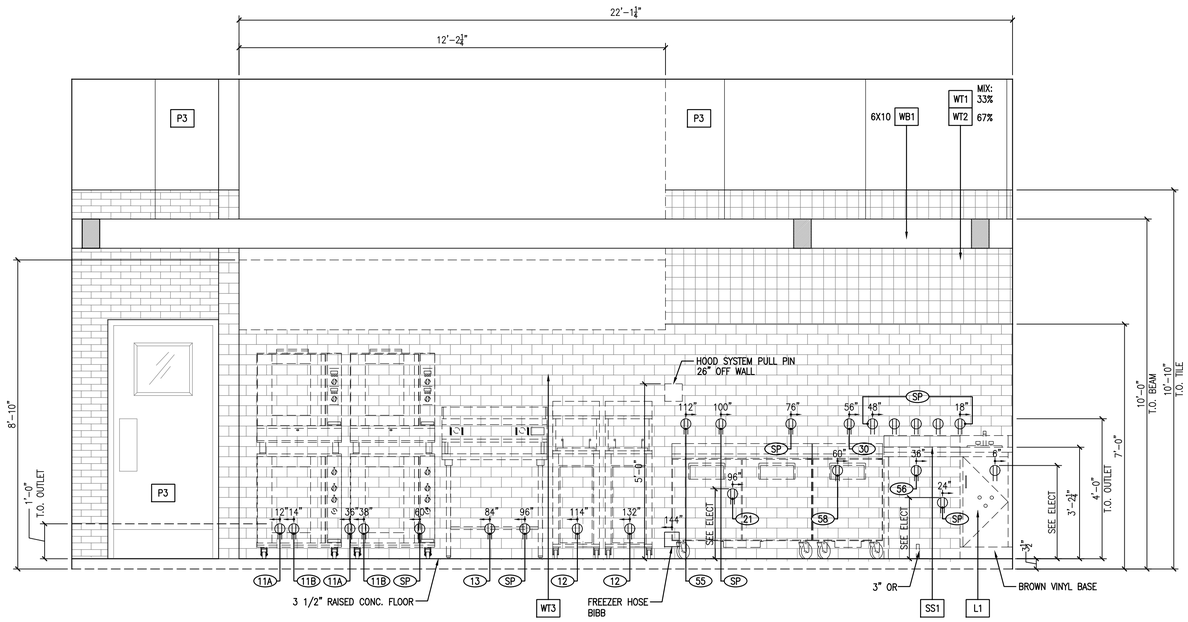

1 A2.03 INTERIOR ELEVATION
1/2" = 1'-0"

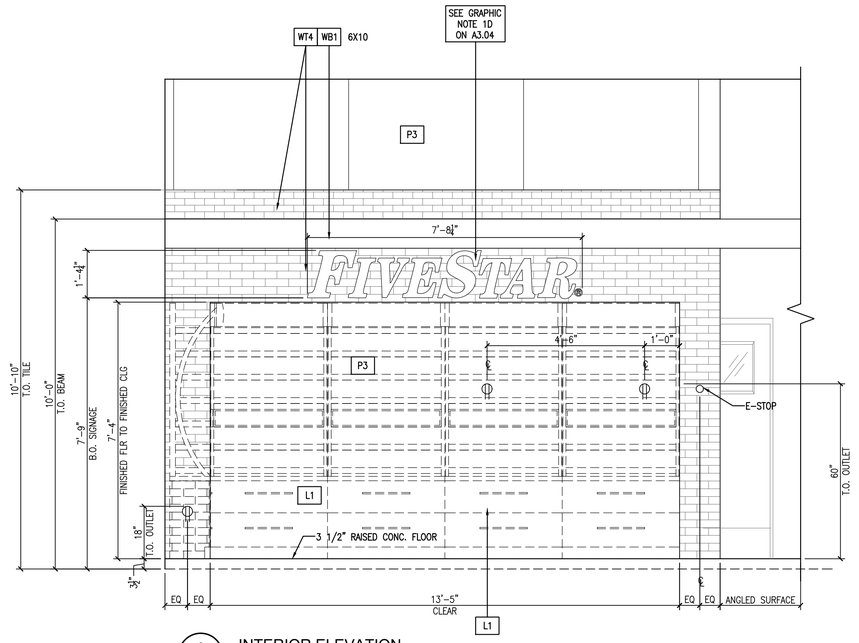

2 A2.03 INTERIOR ELEVATION
1/2" = 1'-0"

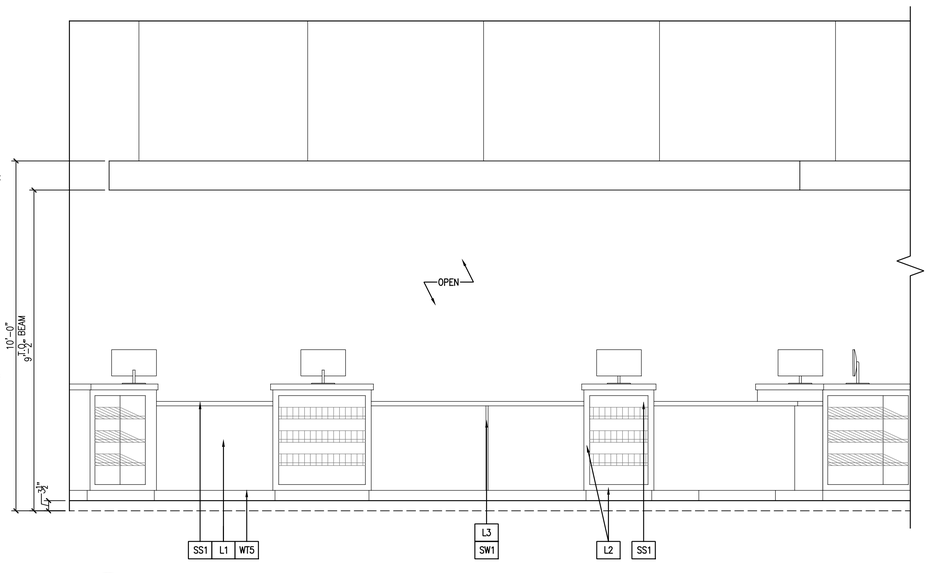

3 A2.03 INTERIOR ELEVATION
1/2" = 1'-0"

FOR REFERENCE ONLY – SEE FLOOR PLAN FOR NEW LAYOUT

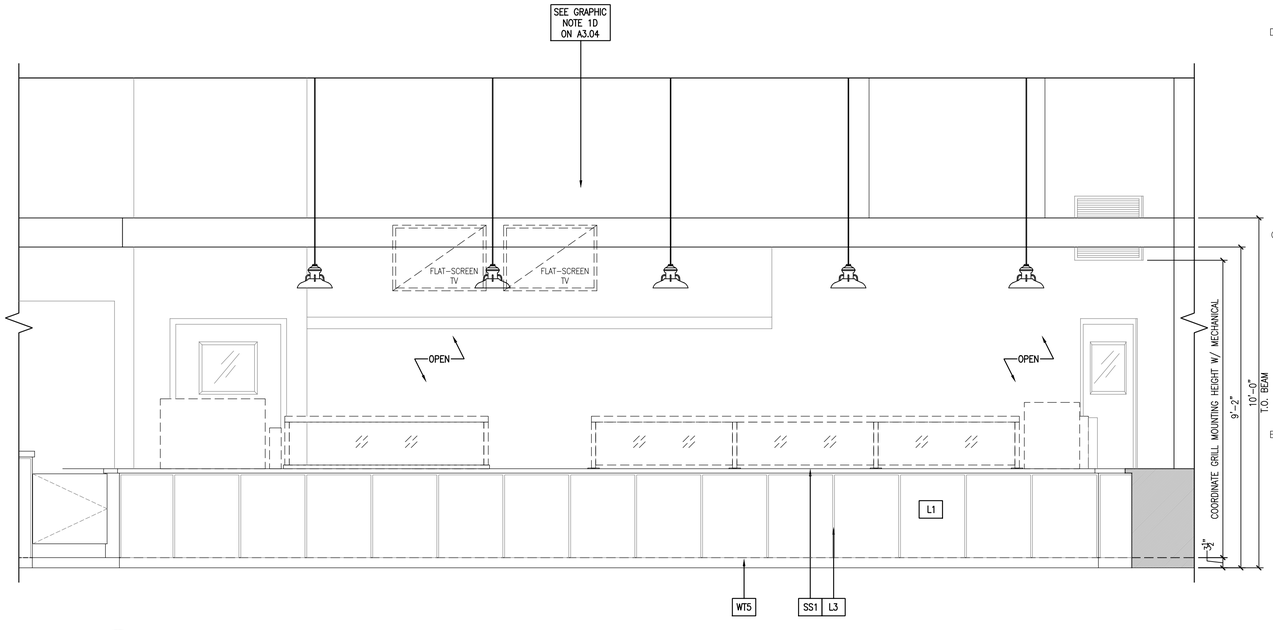

4 A2.03 INTERIOR ELEVATION
1/2" = 1'-0"

FOR REFERENCE ONLY – SEE FLOOR PLAN FOR NEW LAYOUT

CMW The Shape of Ideas
Architecture
Civil Engineering
Landscape Architecture
a: 249 East Main Street
Suite 100
Lexington, Kentucky 40507
o: (859) 254-6623
w: www.cmwaec.com

BILL PICKERING REGISTERED No. 4915 COMMONWEALTH OF KENTUCKY ARCHITECT
31 MAY 2024

INTERIOR ELEVATIONS

FiveStar - #4460 Hopkinsville
NEWCOMB OIL CO., LLC
3070 PEMBROKE RD.
HOPKINSVILLE, KY 42240

CONSTRUCTION DOCUMENTS

Issue Date:	May 29, 2024
Drawn By:	JMT
Checked By:	BP
Revisions:	
Mark	Date

AHJ SEAL

Project Number
24010.01

A2.03

Xrefs: 36X24SHT_Newcomb

File Name: Q:\Newcomb Oil\24010.01 Hopkinsville 6500 LH\02 DWG\03 ARCH\04 CD PHASE\SHEET\A2.03.dwg

PLOT DATE: Tuesday, May 28, 2024 10:30:32 AM

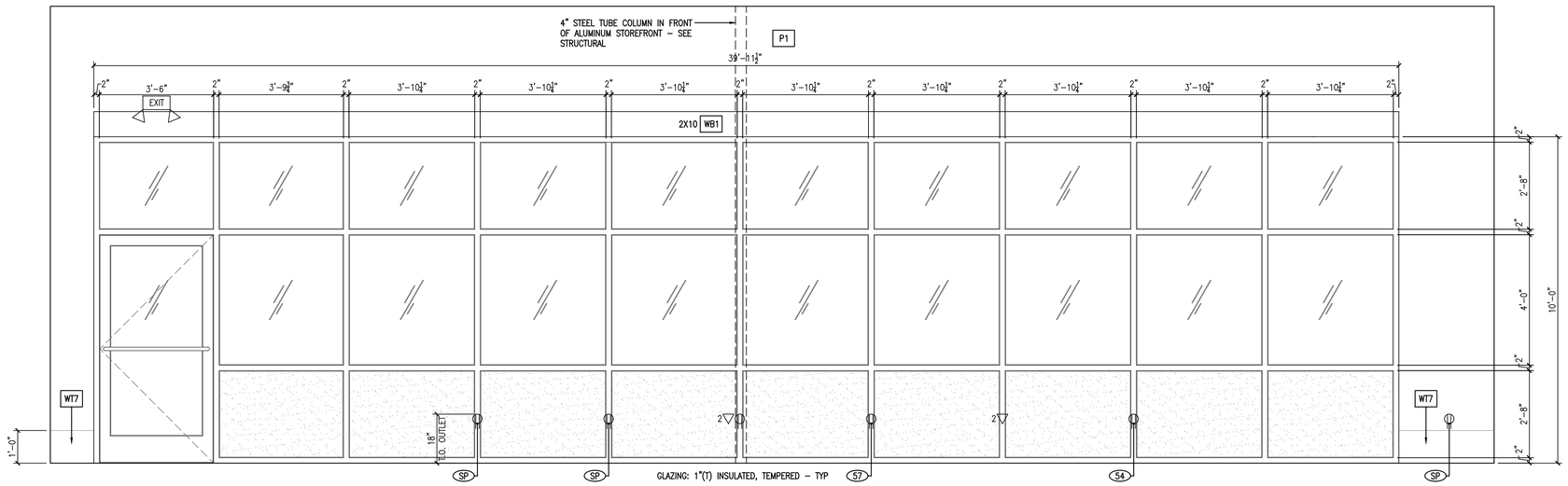

1 / A2.04 INTERIOR ELEVATION
1/2" = 1'-0"

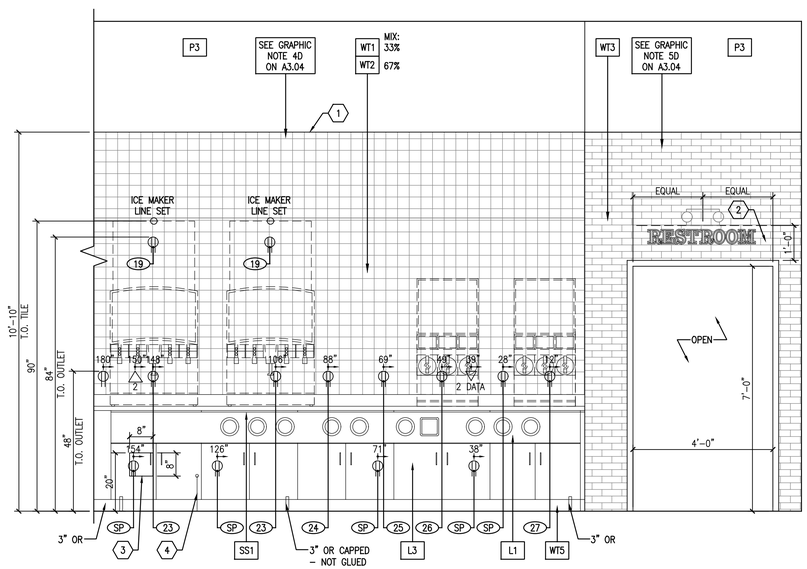

2 / A2.04 INTERIOR ELEVATION
1/2" = 1'-0"

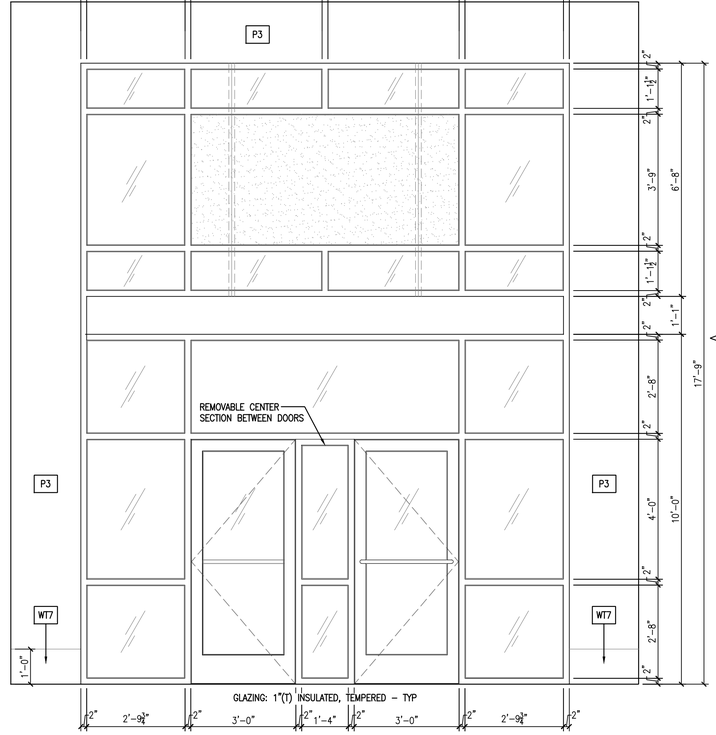

3 / A2.04 INTERIOR ELEVATION
1/2" = 1'-0"

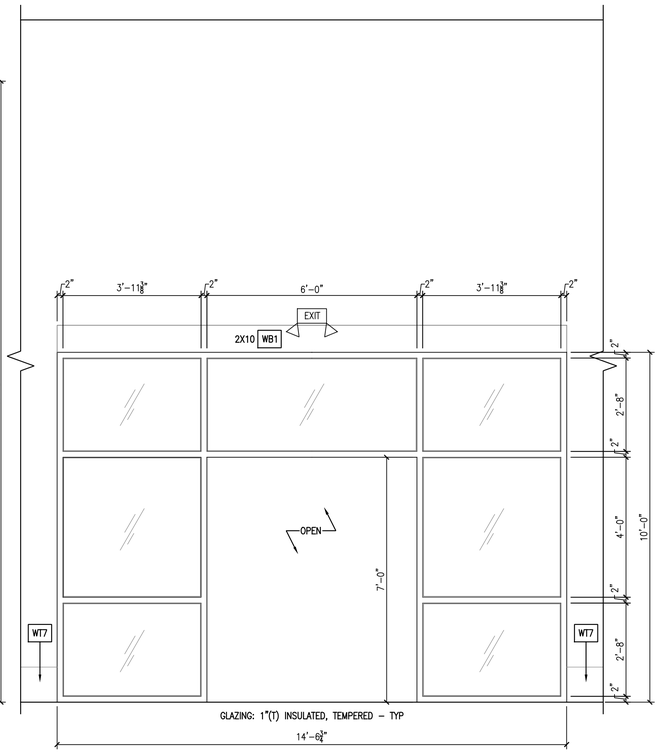

4 / A2.04 INTERIOR ELEVATION
1/2" = 1'-0"

GENERAL NOTES

A. REFER TO SHEETS A1.01 AND A2.01 'GENERAL NOTES'
B. REFER TO SHEET A2.01 'EXTERIOR FINISH SCHEDULE'
C. REFER TO SHEET A1.03 'EQUIPMENT SCHEDULE'
D. REFER TO SHEET A3.04 'INTERIOR FINISH SCHEDULE'

SHEET KEYNOTES ⬡

1. CENTER TILE LAYOUT ON WALL, NO EDGE TILE SMALLER THAN 1–1/2" WIDE
2. MAINTAIN A 12" CLEARANCE HERE PRIOR TO INSTALLING A EGRESS EMERGENCY LIGHT
3. SYRUP LINE OPENING
4. 6 WATER MANIFOLD AGAINST CABINET

CMW The Shape of Ideas
Architecture
Civil Engineering
Landscape Architecture
a: 249 East Main Street
Suite 100
Lexington, Kentucky 40507
o: (859) 254-6623
w: www.cmwsec.com

BILL PICKERING REGISTERED No. 19915 COMMONWEALTH OF KENTUCKY ARCHITECT
31 MAY 2024

INTERIOR ELEVATIONS
FiveStar - #4460 Hopkinsville
NEWCOMB OIL CO., LLC
3070 PEMBROKE RD.
HOPKINSVILLE, KY 42240

CONSTRUCTION DOCUMENTS

Issue Date:	May 29, 2024
Drawn By:	JMT
Checked By:	BP
Revisions:	

Mark	Date
-	
-	
-	
-	
-	

AHJ SEAL

Project Number
24010.01

A2.04

Xrefs: 36X24ShT_Newcomb

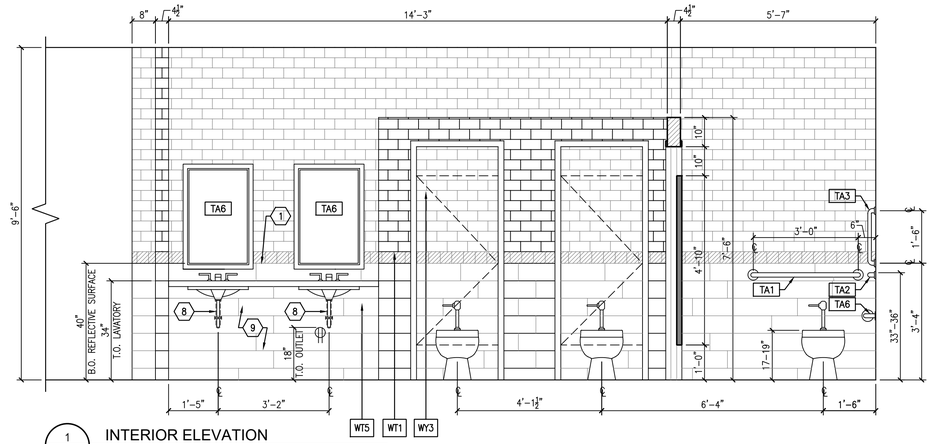

1 A2.05 INTERIOR ELEVATION
1/2" = 1'-0"

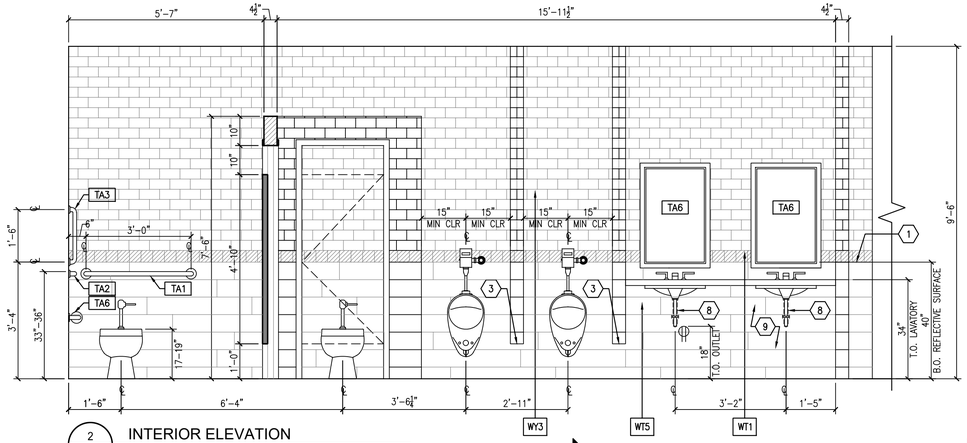

2 A2.05 INTERIOR ELEVATION
1/2" = 1'-0"

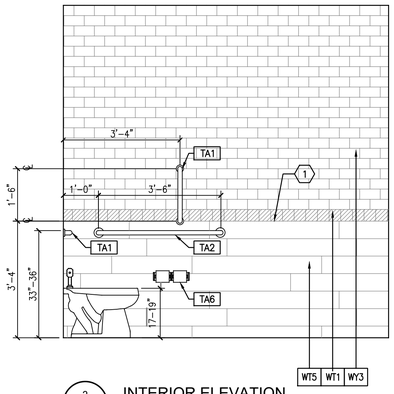

3 A2.05 INTERIOR ELEVATION
1/2" = 1'-0"

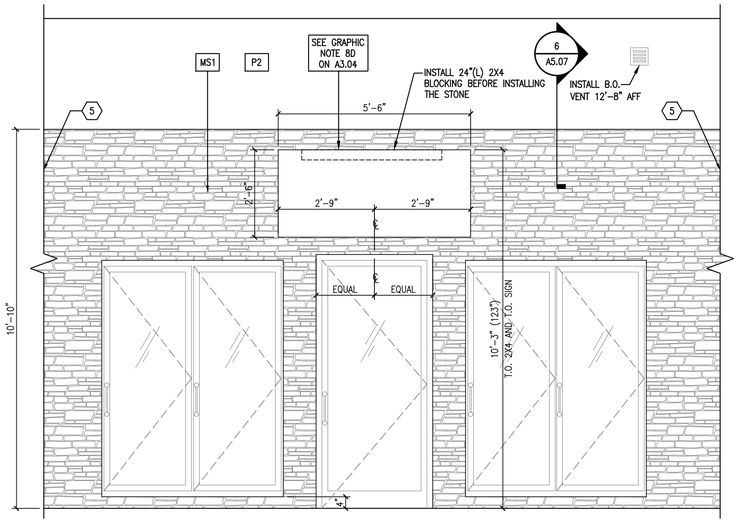

6 A2.05 INTERIOR ELEVATION
1/2" = 1'-0"

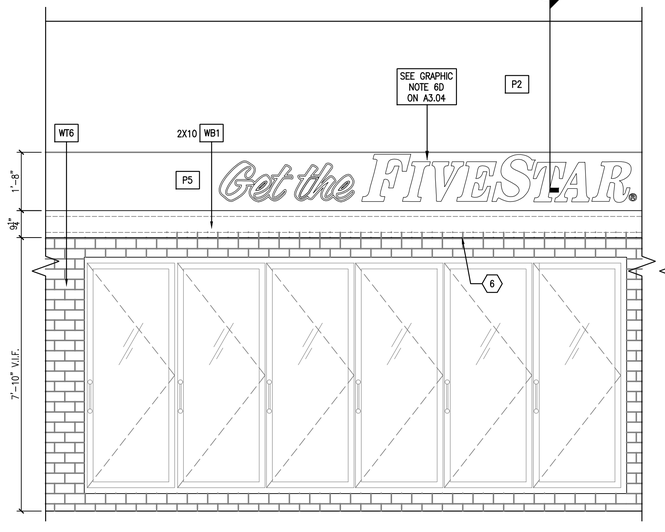

5 A2.05 INTERIOR ELEVATION
1/2" = 1'-0"

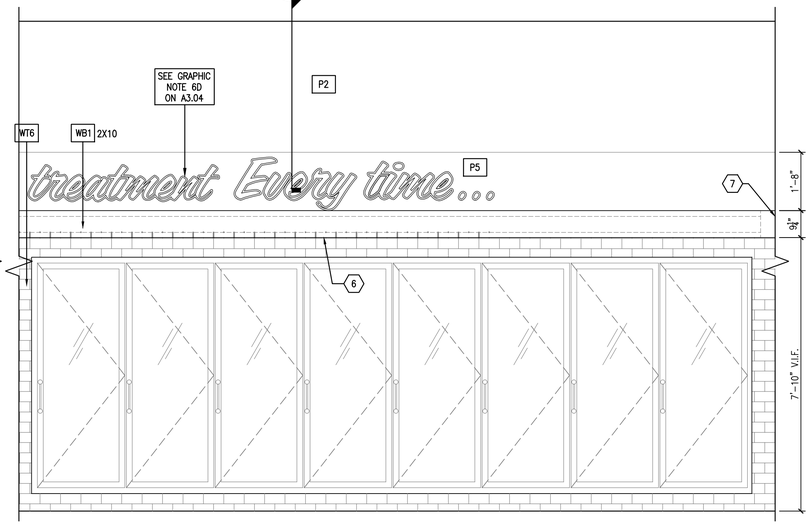

4 A2.05 INTERIOR ELEVATION
1/2" = 1'-0"

Toilet / Custodial Accessories Schedule

PLAN TAG TA#	DESCRIPTION	MOUNTING TYPE: SURFACE	MOUNTING TYPE: SEMI-RECESSED	MOUNTING TYPE: RECESSED	TOILET ACCESSORIES SCHEDULE REMARKS
TA1	36" GRAB BAR (HORIZONTAL)	●	–	–	–
TA2	42" GRAB BAR (HORIZONTAL)	●	–	–	–
TA3	18" GRAB BAR (VERTICAL)	●	–	–	–
TA4	TOILET PAPER DISPENSER	●	–	–	(OFCI) OWNER FURNISHED CONTRACTOR INSTALLED
TA5	SOAP DISPENSER	●	–	–	–
TA6	MIRROR 20"x36"	●	–	–	PROVIDE 2" STAINLESS STEEL FRAME
TA7	ROBE HOOK	●	–	–	INSTALL CENTERED WITHIN DOOR
TA9	PAPER TOWEL DISPENSER	●	–	–	–

GENERAL:

1. INSTALL TOILET ACCESSORIES PER ADA REQUIREMENTS
2. OFCI – OWNER FURNISHED CONTRACTOR INSTALLED
3. EXAMINE SUBSTRATES AND AREAS, WITH INSTALLER PRESENT, FOR COMPLIANCE WITH REQUIREMENTS FOR INSTALLATION TOLERANCES AND OTHER CONDITIONS AFFECTING PERFORMANCE OF THE WORK. PROCEED WITH INSTALLATION ONLY AFTER UNSATISFACTORY CONDITIONS HAVE BEEN CORRECTED.

GENERAL NOTES

A. REFER TO SHEETS A1.01 AND A2.01 'GENERAL NOTES'

B. REFER TO SHEET A3.04 'INTERIOR FINISH SCHEDULE'

SHEET KEYNOTES ⬡

1. PROVIDE AND INSTALL RONDEC MTL TRIM AT TOP OF LOWER TILE, TYP.
2. NOTE USED
3. HOLD BOTTOM OF DIVIDER WALL 12" ABOVE FLOOR AND TILE BOTTOM
4. OWNER FURNISHED AND OWNER INSTALLED (O.F.O.I.) SURFACE–MOUNTED TOILET PAPER DISPENSER – REFER TO ADA REQUIREMENTS DETAILS
5. EDGE STONE SHALL BE CUT CORNER STONES
6. 2X10 CEDAR OVER 2X6 PINE. PAINT BOTTOM PINE REVEAL. 2X6 SHALL BUTT TO FULL TILE. REFER TO DETAIL 6/A–552.
7. MITER END OF 2X10 AND RETURN TO WALL
8. INSULATE / COVER WATER SUPPLY AND DRAIN PIPES BENEATH LAVATORY PER ADA REQUIREMENTS
9. PROVIDE WOOD BLOCKING @ WALL BEHIND VANITY FROM T.O. CONCRETE FLOOR TO T.O. FAUCET – TYP.

CMW The Shape of Ideas
Architecture
Civil Engineering
Landscape Architecture
a: 249 East Main Street
Suite 100
Lexington, Kentucky 40507
o: (859) 254-6623
w: www.cmwsec.com

BILL PICKERING REGISTERED No. 19915 COMMONWEALTH OF KENTUCKY ARCHITECT
31 MAY 2024

INTERIOR ELEVATIONS

FiveStar - #4460 Hopkinsville
NEWCOMB OIL CO., LLC
3070 PEMBROKE RD.
HOPKINSVILLE, KY 42240

CONSTRUCTION DOCUMENTS

Issue Date:	May 29, 2024
Drawn By:	JMT
Checked By:	BP

Revisions:

Mark	Date
-	
-	
-	
-	
-	

AHJ SEAL

Project Number
24010.01

A2.05

Xrefs: 350-24SHT_Newcomb
File Name: Q:\Newcomb Oil\24010.01 Hopkinsville 6500 LH\02 DWG\03 ARCH\04 CD PHASE\SHEET\A2.05.dwg
PLOT DATE: Tuesday, May 28, 2024 10:31:06 AM

GENERAL NOTES

A. REFER TO SHEET A1.01 "GENERAL NOTES"

B. REFER TO SHEET A2.05 "SHEET KEYNOTES" AND "TOILET / CUSTODIAL ACCESSORIES SCHEDULE"

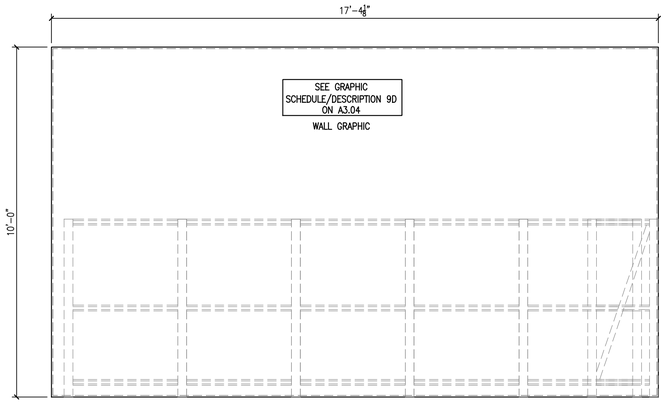

1 A2.06 INTERIOR ELEVATION
1/2" = 1'-0"

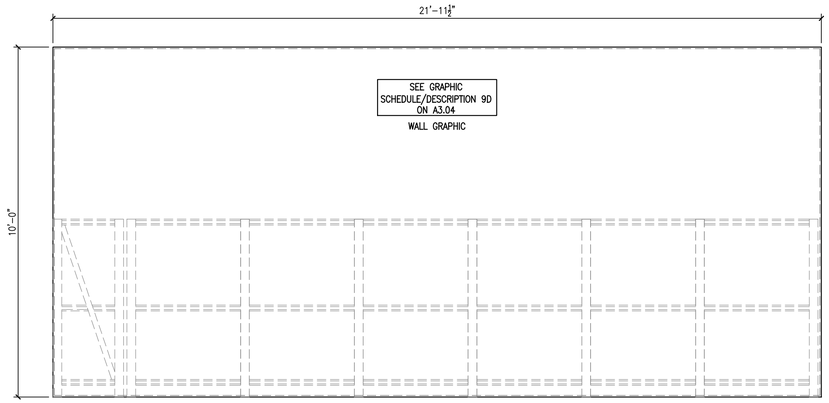

2 A2.06 INTERIOR ELEVATION
1/2" = 1'-0"

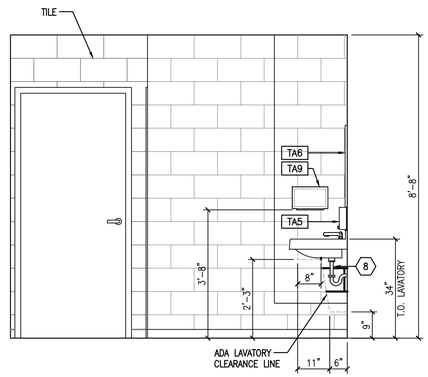

3 A2.06 ADA REQUIREMENTS
1/2" = 1'-0"

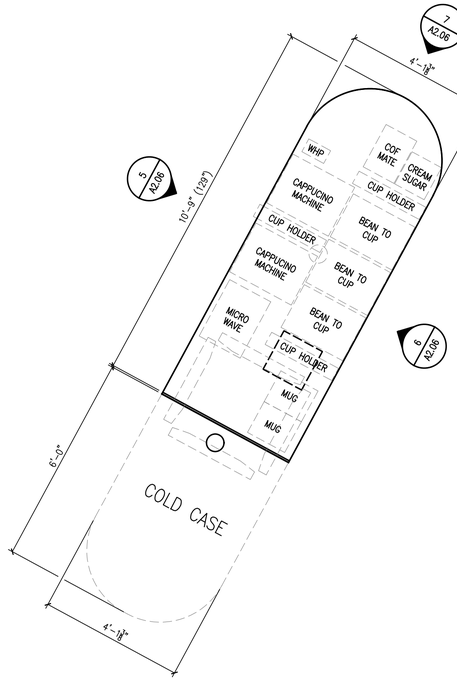

4 A2.06 ENLARGED ISLAND PLAN
1/2" = 1'-0"

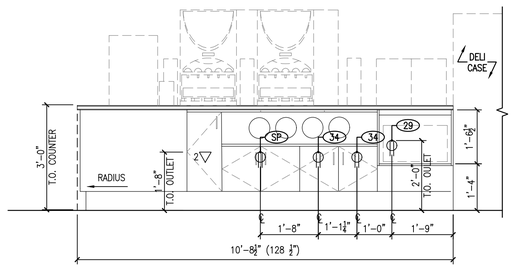

5 A2.06 ISLAND ELEVATION
1/2" = 1'-0"

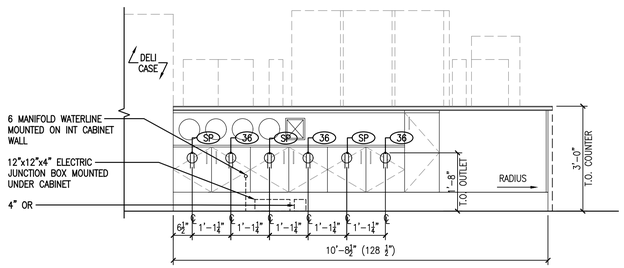

6 A2.06 ISLAND ELEVATION
1/2" = 1'-0"

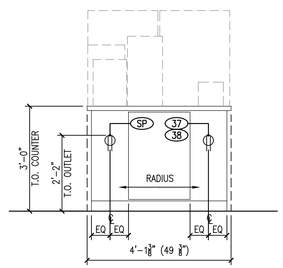

7 A2.06 ISLAND ELEVATION
1/2" = 1'-0"

CMW The Shape of Ideas

Architecture
Civil Engineering
Landscape Architecture
a: 249 East Main Street
Suite 100
Lexington, Kentucky 40507
o: (859) 254-6623
w: www.cmwsec.com

BILL PICKERING REGISTERED No. 7915 COMMONWEALTH OF KENTUCKY ARCHITECT
31 MAY 2024

INTERIOR ELEVATIONS

FiveStar - #4460 Hopkinsville
NEWCOMB OIL CO., LLC
3070 PEMBROKE RD.
HOPKINSVILLE, KY 42240

CONSTRUCTION DOCUMENTS

Issue Date:	May 29, 2024
Drawn By:	JMT
Checked By:	BP
Revisions:	
	-
	-
	-
	-
	-
Mark	Date

AHJ SEAL

Project Number
24010.01

A2.06

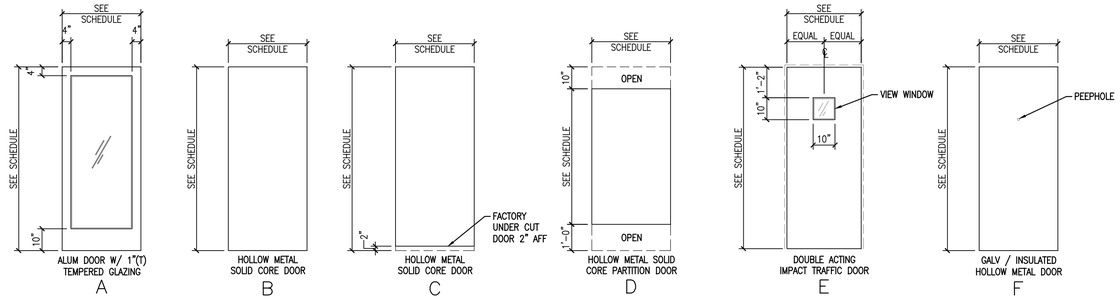

2 A3.03 DOOR ELEVATIONS
3/8" = 1'-0"

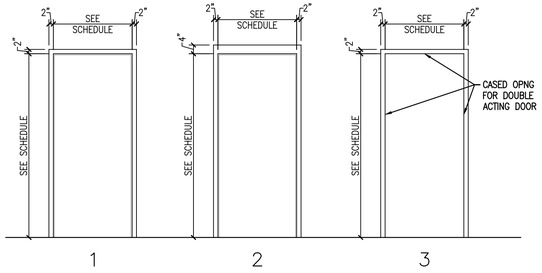

3 A3.03 DOOR FRAME ELEVATIONS
3/8" = 1'-0"

DOOR AND FRAME SCHEDULE

DOOR NO.	ROOM NO.	DOORS SIZE	MATERIAL	TYPE	CORE	FINISH	FRAMES MATERIAL	TYPE	FINISH	DEPTH	DETAILS HEAD	JAMB	SILL	RATING	HDWR. SET	REMARKS	DOOR NO.
101	100 VESTIBULE	3'-0" x 7'-0" x 1 3/4"	ALUM	A	-	ANOD	ALUM	3/A2.04	ANOD	4 1/2"	-	-	-	-	-	1; 15; 18	101
102	100 VESTIBULE	3'-0" x 7'-0" x 1 3/4"	ALUM	A	-	ANOD	ALUM	3/A2.04	ANOD	4 1/2"	-	-	-	-	-	2; 15; 18	102
103	100 VESTIBULE	3'-0" x 7'-0" x 1 3/4"	ALUM	A	-	ANOD	ALUM	3/A2.04	ANOD	4 1/2"	-	-	-	-	-	1; 15; 18	103
104	100 VESTIBULE	3'-0" x 7'-0" x 1 3/4"	ALUM	A	-	ANOD	ALUM	3/A2.04	ANOD	4 1/2"	-	-	-	-	-	2; 15; 18	104
-	-	NOT USED	-	-	-		-	-		-	-	-	-	-	-	-	-
-	-	NOT USED	-	-	-		-	-		-	-	-	-	-	-	-	-
107	102 DELI	3'-0" x 7'-0" CASED OPENING	ALUM	E	-	ANOD	HM	3	PT	5 1/2"	-	-	-	-	-	4	107
108	102 DELI	3'-0" x 7'-0" CASED OPENING	ALUM	E	-	ANOD	HM	3	PT	5 1/2"	-	-	-	-	-	4	108
108A	108A STORAGE	3'-0" x 7'-0" x 1 3/4"	HM	B	-	PT	HM	1	PT	5 1/2"	-	-	-	-	-	-	108A
109	103 OFFICE	3'-0" x 7'-0" x 1 3/4"	HM	B	-	PT	HM	1	PT	5 1/2"	-	-	-	-	TRILOGY	5	109
110	103A OFFICE CLOSET	2'-0" x 7'-0" x 1 3/4"	HM	C	-	PT	HM	1	PT	5 1/2"	-	-	-	-	-	6; 17	110
111	111 DISHWASHING	3'-6" x 7'-0" x 1 3/4"	GALV HM	F	-	PT	GALV HM	2	PT	8 1/2"	-	-	-	-	-	13	111
112	112 UTILITY ROOM	3'-0" x 7'-0" x 1 3/4"	HM	B	-	PT	HM	1	PT	5 1/2"	-	-	-	-	TRILOGY	5; 16	112
113	104 ELECTRICAL ROOM	3'-0" x 7'-0" x 1 3/4"	HM	C	-	PT	HM	1	PT	5 1/2"	-	-	-	-	-	16; 19	113
-	-	NOT USED	-	-	-		-	-		-	-	-	-	-	-	-	-
114	107 WOMENS RESTROOM	3'-0" x 6'-8" x 1 3/4"	HM	D	-	PT	HM	1	PT	5 1/2"	-	-	-	-	-	10	114
115	107 WOMENS RESTROOM	2'-4" x 6'-8" x 1 3/4"	HM	D	-	PT	HM	1	PT	5 1/2"	-	-	-	-	-	9	115
116	107 WOMENS RESTROOM	2'-4" x 6'-8" x 1 3/4"	HM	D	-	PT	HM	1	PT	5 1/2"	-	-	-	-	-	9	116
-	-	NOT USED	-	-	-		-	-		-	-	-	-	-	-	-	-
-	-	NOT USED	-	-	-		-	-		-	-	-	-	-	-	-	-
119	109 MENS RESTROOM	2'-4" x 6'-8" x 1 3/4"	HM	D	-	PT	HM	1	PT	5 1/2"	-	-	-	-	-	9	119
120	109 MENS RESTROOM	3'-0" x 6'-8" x 1 3/4"	HM	D	-	PT	HM	1	PT	5 1/2"	-	-	-	-	-	10	120
121	110 STORAGE	3'-0" x 7'-0" x 1 3/4" (PAIR)	GALV HM	F	INSUL	PT	GALV HM	1	PT	-	-	-	-	-	-	13; 14	121
122	110 STORAGE	3'-0" x 7'-0" x 1 3/4"	HM	B/F	-	PT	HM	1	PT	5 1/2"	-	-	-	-	-	12	122
123	106 HALLWAY	3'-0" x 7'-0" x 1 3/4"	HM	B	-	PT	HM	1	PT	5 1/2"	-	-	-	-	-	8	123

DOOR AND FRAME SCHEDULE REMARKS:

1. HARDWARE BY DOOR MANF – CLEAR ANODIZED ALUMINUM PUSH BAR ON PUSH SIDE OF "OUT DOOR" – REFER TO NOTES FOR ADDITIONAL HARDWARE
2. HARDWARE BY DOOR MANF – CLEAR ANODIZED ALUMINUM PUSH BAR ON PUSH SIDE OF "IN DOOR" – REFER TO NOTES FOR ADDITIONAL HARDWARE
3. HARDWARE BY DOOR MANF – CLEAR ANODIZED ALUMINUM PANIC DEVICE – REFER TO NOTES FOR ADDITIONAL HARDWARE
4. ELIASON DOOR
5. LEVER, TRILOGY LOCK, HINGES, WALL STOP
6. LEVER, LOCK, PICK GUARD, HINGES, WALL STOP, UNDERCUT DOOR 1"
7. PANIC DEVICE, HINGES, CLOSER INSIDE, FLOOR STOP
8. LEVER, LOCK, HINGES, CLOSER INSIDE, WALL STOP, FULL HEIGHT AND WIDTH STAINLESS STEEL DOOR PROTECTION PLATE ON PUSH SIDE
9. OCCUPIED / UNOCCUPIED DEADBOLT, PUSH / PULL DRILLED TO ACCOMMODATED DEADBOLT, HINGES
10. OCCUPIED / UNOCCUPIED DEADBOLT, PUSH / PULL DRILLED TO ACCOMMODATED DEADBOLT, (1) HINGE, (1) SPRING HINGE
11. PASSAGE LEVER SET, HINGES, CLOSER WITH 90 DEG STOP AND MOUNTED INSIDE CLOSET
12. PULL, CLOSER INSIDE, HINGES, CLOSER STOP AT 110 DEG, FULL HEIGHT AND WIDTH STAINLESS STEEL DOOR PROTECTION PLATE ON PUSH SIDE
13. GALVANIZED, INSULATED, PANIC DEVICE (NO HARDWARE ON OUTSIDE), SCREW ON WEATHER STRIPPING & SWEEP, THRESHOLD, PEEP HOLE, HINGES, CLOSER, 4" HEAD
14. DOOR 121 SHALL HAVE A THRESHOLD, PEEPHOLE, PICK GUARD AND WEATHER STRIPPING
15. DOORS 101, 102, 103 AND 104 SHALL BE KEYED ALIKE. PUSH BAR ON IN AND OUT
16. DOORS 112 AND 113 SHALL BE KEYED ALIKE
17. DOOR 110 OFFICE CLOSET SHALL BE KEYED SEPARATELY
18. HARDWARE FOR ALUM. DOORS 101, 102, 103, 104 AND 105 PROVIDED BY MANUFACTURER. HINGES (1 ½ PAIR OF BUTT HINGES FOR DOOR 105, CONTINUOUS HINGES FOR DOORS 101, 102, 103 AND 104), DEADLOCK, WITH 5 PIN CYLINDER (KEYED ALIKE), (BOTH SIDES, KBC 1010.1.9.3), GRADE 1, ADA. CLOSER, WITH ADJUSTABLE SPRING TENSION, ADA THRESHOLDS (GROUTED SOLID), WEATHER STRIP, & BOTTOM RAIL SWEEP. REFER TO SCHEDULE FOR PUSH BARS AND PANIC DEVICE. NO PULLS ON ALUM DOORS.
19. LEVER, HINGES, WALL STOP

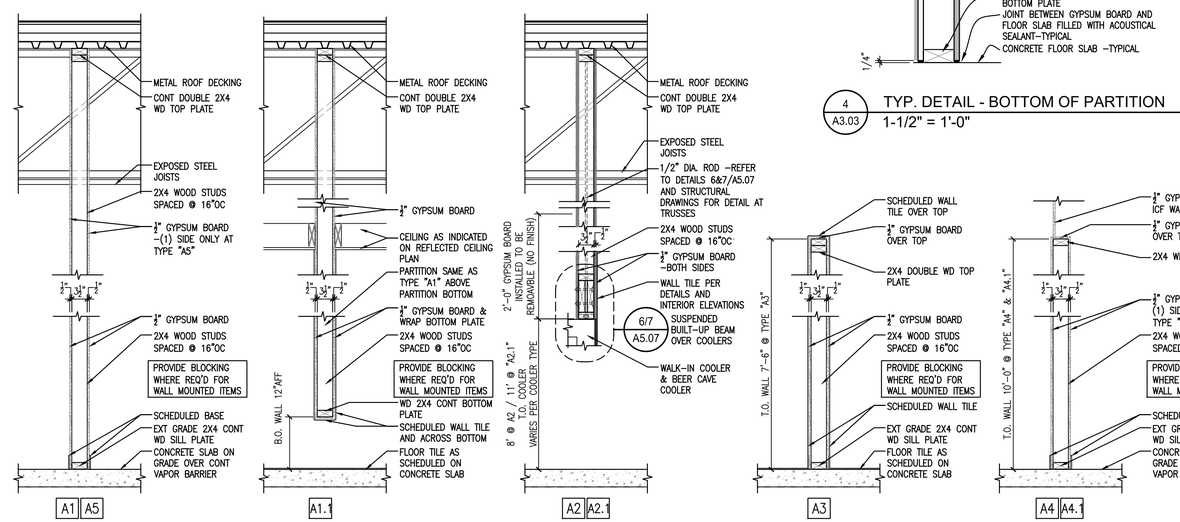

4 A3.03 TYP. DETAIL - BOTTOM OF PARTITION
1-1/2" = 1'-0"

DOOR & FRAME SCHEDULE GENERAL NOTES

A. GLASS SHALL BE TEMPERED WHERE REQUIRED BY CODE
B. VERIFY ALL WALL DEPTHS, REQUIRED FRAME DEPTHS AND FRAME DIMENSIONS IN THE FIELD
C. ALL DOORS SHALL HAVE 3 HINGES EXCEPT FOR ENTRANCE DOORS, REFER TO NOTES BELOW
D. ALL HINGES ARE BALL BEARING
E. ALL CLOSURES ARE MEDIUM DUTY
F. ALL LEVER SETS ARE MEDIUM DUTY
G. DOOR HARDWARE SHALL MEET HANDICAP REQUIREMENTS
H. ALL DOORS SHALL HAVE DOOR SILENCERS AND DOOR STOPS INCLUDING RESTROOM STALL DOORS.
I. NOTE: WHILE BUILDING IS BEING OCCUPIED SIGN SHALL BE WITH 1" LETTERS HIGH THAT READS: "THIS DOOR IS TO REMAIN UNLOCKED WHEN THIS SPACE IS OCCUPIED"
J. CLOSERS ON DOORS INTO STORAGE AND RESTROOMS SHALL BE INSTALLED ON STORAGE AND RESTROOM SIDE SO THAT THEY ARE NOT VISIBLE FROM THE HALLWAY.

GENERAL NOTES

A. REFER TO SHEETS A1.01 AND A2.01 'GENERAL NOTES'
B. REFER TO SHEET A2.01 'EXTERIOR FINISH SCHEDULE'

1 A3.03 PARTITION DETAILS
3/4" = 1'-0"

CMW The Shape of Ideas
Architecture
Civil Engineering
Landscape Architecture
a: 249 East Main Street
Suite 100
Lexington, Kentucky 40507
o: (859) 254-6623
w: www.cmwdec.com

BILL PICKERING REGISTERED No. 4915 COMMONWEALTH OF KENTUCKY ARCHITECT
31 MAY 2024

DOOR AND FRAME SCHEDULE

FiveStar - #4460 Hopkinsville
NEWCOMB OIL CO., LLC
3070 PEMBROKE RD.
HOPKINSVILLE, KY 42240

CONSTRUCTION DOCUMENTS

Issue Date:	May 29, 2024
Drawn By:	BP / JMT
Checked By:	BP
Revisions:	
	-
	-
	-
	-
	-
Mark	Date

AHJ SEAL

Project Number
24010.01

A3.03

Xrefs: 3BG24SHT_Newcomb
File Name: Q:\Newcomb Oil\24010.01 Hopkinsville 6500 LH\02 DWG\03 ARCH\04 CD PHASE\SHEET\A3.03.dwg
PLOT DATE: Tuesday, May 28, 2024 10:34:28 AM

EXTERIOR FINISH SCHEDULE

CODE	DESCRIPTION	COLOR / TYPE	MANUFACTURER NOTES
EX1	EXTERIOR BRICK	COLOR: CHARLESTON WELLINGTON	SIOUX CITY
		TYPE: MODULAR BRICK	
EX2	EXTERIOR BRICK	COLOR: WHITE PLAINS	SIOUX CITY
		TYPE: MODULAR BRICK	
EX3	METAL PARAPET CAP	COLOR: PATRIOT RED (METALLIC)	METAL SALES
		TYPE: 24GA KYNAR FINISH	
EX4	METAL PARAPET CAP	COLOR: MYSTIC PLUS	METAL SALES
		TYPE: 24GA KYNAR FINISH	
EX5	METAL ROOF 'TEE PANEL' STAINDING SEAM ROOF	COLOR: PATRIOT RED (METALLIC)	METAL SALES
		TYPE: 24GA KYNAR FINISH	
EX6	METAL ROOF	COLOR: PATRIOT RED (METALLIC)	TENNESSEE VALLEY METALS
	DECKING & D.S.(GRAY)	COLOR: MYSTIC PLUS	GALVANIZED
EX7	ALUMINUM STOREFRONT	SEE A2.01 GENERAL NOTES	
EX8	ALUMINUM STOREFRONT	SEE A2.01 GENERAL NOTE 9	
EX9	SOFFIT PANEL	COLOR: GR50-KYNAR LINEN WHITE	METAL SALES
		TYPE: V-GROOVE 12 (26GA)	
	GLAZING	SEE A2.01 GENERAL NOTES	
	INSULATED METAL PANEL	SEE A2.01 GENERAL NOTES	

INTERIOR FINISH SCHEDULE

CODE	DESCRIPTION / LABEL	AREA / SUBSTRATE	COLOR	PRODUCT # / SERIES	MANF	CONTACT
EF1	EPOXY FLOOR	FLOORS	STANDARD COLOR	-	-	-
FRP-1	MARLITE AT 10'-0"	WALL COVERING	STANDARD COLOR	-	MARLITE	-
FRP-2	MARLITE AT 4'-0"	WALL COVERING	STANDARD COLOR	-	MARLITE	-
FT1	12"X12" PORCELAIN STONE TILE (BRICKWORK PATTERN)	VESTIBULE / SALES FLR. / BEER CAVE / RR / STORAGE FLOORS	#VL78 ACCENT BROWN	-	-	-
	3/16" GROUT LINES	VESTIBULE / SALES FLR. / BEER CAVE / RR / STORAGE FLOORS	#145 LIGHT SMOKE SANDED GROUT	-	-	-
FT2	6"X24" PORCELAIN TILE	SALES FLR. / DELI FLOORS	#HH03 TEAK	COLORBODY		
	3/16" GROUT LINES	SALES FLR. / DELI FLOORS	#59 SADDLE BROWN SANDED GROUT	-	-	-
FT3	6X6 PAVER	-	0Q96 CHARCOAL STD 0Q96661P	-	-	-
	GROUT	-	#145 LIGHT SMOKE GROUT	POLY BLEND PLUS	-	-
L1	PLASTIC LAMINATE ARTISAN FINISH	-	6206-43	PLANKED DELUXE PEAR	FORMICA	1.800.FORMICA
L2	PLASTIC LAMINATE CASHMERE FINISH	-	P-260 CA	TATAMI SABI	ARBORITE	800.361.8712
L3	PLASTIC LAMINATE CASHMERE FINISH	-	P-354 CA	TATAMI KOKOA	ARBORITE	800.361.8712
MS1	MANUFACTURED STONE VENEER	-	DRY CREEK	STACKED STONE	ELDORADO STONE	800.925.1491
P1	SUPERPAINT INT. LATEX SATIN / PRIMER	SALES FLR. & STORAGE ROOM WALLS / DRYWALL	SW7506 LOGGIA	A87WO1151	SHERWIN WILLIAMS	-
P2	SUPERPAINT INT. LATEX SATIN / PRIMER	ACCENT ABOVE COOLER WALL / DRYWALL	SW6221 MOODY BLUE	A87W01153	SHERWIN WILLIAMS	-
P3	SUPERPAINT INT. LATEX SATIN / PRIMER	FRONT DOOR WALL / DRYWALL	SW7598 SIERRA REDWOOD	A87W01153	SHERWIN WILLIAMS	-
P4	PRO INDUST. PRECATAL WATERBASED EPOXY EG-SHEL / FINISH	DOOR JAMBS / STEEL	SW7515 HOMESTEAD BROWN	B53T01154	SHERWIN WILLIAMS	-
P5	SUPERPAINT INT. LATEX SATIN / PRIMER	ABOVE WALK-IN COOLER / DRYWALL	SW6395 ALCHEMY	A87W01153	SHERWIN WILLIAMS	-
P6	PRO INDUSTRIAL URETHANE ALKYD ENAMEL GLOSS / FINISH	EXTERIOR METAL DOORS / STEEL	SW7598 SIERRA REDWOOD	B54T01154	SHERWIN WILLIAMS	-
P7	CHB INTERIOR LATEX FLAT	CEILING DRYWALL	WHITE	B30WC4051	SHERWIN WILLIAMS	-
P8	WATERBOURNE ACRYLIC DRY FALL FLAT WHITE	CEILING OPEN AREA/GALVANIZED	WHITE	B42W00181	SHERWIN WILLIAMS	-
P9	PRO INDUSTRIAL URETHANE ALKYD ENAMEL GLOSS / FINISH	BATHROOM DOORS - STALL	SW7598 SIERRA REDWOOD	B54T01154	SHERWIN WILLIAMS	-
P10	PRO INDUSTRIAL URETHANE ALKYD PRIMER	AC TRUCK LINES - PRIMER	WHITE	B66W310	SHERWIN WILLIAMS	-
P11	PRO INDUSTRIAL URETHANE ALKYD ENAMEL GLOSS / FINISH	AC TRUCK LINES - FINISH	WHITE	K46W01151	SHERWIN WILLIAMS	-
	M-1 ADVANCED MILDEW TREATMENT		CLEAR	78908M	SHERWIN WILLIAMS	-
SS1	1/2" SOLID SURFACING	-	SERENE SAGE	TERRA	CORIAN	800.426.7426
WB1	6 X 10, 2 X 10 & 4 X 10 WOOD BEAMS	-	CLEAR SEALER	710520000	SHERWIN WILLIAMS	BY GENERAL CONTRACTOR
WT1	4 X 4 GLAZED PORCELAIN CERAMIC TILE	WALL TILE	Q093 FIREBRICK	145 LIGHT SMOKE	DALTILE	-
WT2	4 X 4 GLAZED PORCELAIN CERAMIC TILE	WALL TILE	0190 ARCTIC WHITE	145 LIGHT SMOKE	DALTILE	-
WT3	4 X 8 GLAZED PORCELAIN CERAMIC TILE	WALL TILE	0190 MOD ARCTIC WHITE	145 LIGHT SMOKE	DALTILE	-
WT4	9/16" FIRED BRICK FLATS	WALL TILE	410 LINCOLN HERITAGE	543 DRIFTWOOD	EVOLUTION BRICK	-
WT5	6 X 36 COLORBODY PORCELAIN TILE	WALL/FLOOR TILE	HH03 TEAK	145 LIGHT SMOKE	DALTILE	-
WT6	4 X 8 GLAZED PORCELAIN TILE	WALL TILE	CUSTOM COLOR - QTC1481P 4x8 QT01	09 NATURAL GREY	DALTILE	-
WT7	12 X 12 COLORBODY PORCELAIN TILE	COVE BASE TILE	VL78 ACCENT BROWN	145 LIGHT SMOKE	DALTILE	-
WT8	NOT USED	-	-	-	-	-
WT9	FINISHING & EDGE-PROTECTION PROFILES	WALLS	SATIN NICKEL / ANODIZED ALUM	DESIGNLINE 1/4"	SCHLUTER SYSTEMS	1.800.472.4588
		ALL HIGH ABUSE CORNERS W/ TILE	SATIN NICKEL / ANODIZED ALUM	RONDEC 1/4"	SCHLUTER SYSTEMS	1.800.472.4588

GRAPHICS SCHEDULE / DESCRIPTION (OPCI)

CODE	DESCRIPTION (REFER TO INTERIOR RENDERINGS FOR OVERALL GRAPHIC APPEARANCE)
1D	FIVE STAR SIGN: THE TEXT IS TO BE 1" DIMENSIONAL TEXT & BACKLIT IN WHITE LED HALO LIGHTING.
	THE TEXT IS TO BE PAINTED ON ALL SIDES.
2D	NOT USED
3D	COFFEE BREW SIGN/GRAPHIC: THE BACKGROUND CIRCLE IS TO BE HUNG FROM THE CEILING BY A CHAIN LINK.
	THE "COFFEE BREW" TEXT IS TO BE BACKLIT IN RED LED HALO. THE CUP IS TO BE 3D AND PROTRUDING FROM THE CIRCLE.
4D	FREEZE & FOUNTAIN SIGN: THE BACKGROUND BAND IS TO BE A BRUSHED STAINLESS STEEL METAL.
	THE "FREEZE & FOUNTAIN" TEXT ARE TO BE BACKLIT IN BLUE LED HALO LIGHTING.
5D	RESTROOM, "MENS", & "WOMENS" SIGNS: THE "RESTROOM" TEXT IS TO BE 1/2" THICK DIMENSIONAL & PAINTED ON ALL SIDES.
	THE MENS & WOMENS TEXT IS TO BE 1/4" THICK DIMENSIONAL AND FACED IN A BRUSHED STAINLESS STEEL LAMINATE.
6D	"GET THE FIVE STAR TREATMENT... EVERY TIME" SIGN: THE TEXT IS TO BE 2" THICK DIMENSIONAL TEXT AND PAINTED ON
	ALL SIDES. THE LETTERS ARE TO BE BACKLIT IN YELLOW LED HALO LIGHTING.
7D	"ATM" SIGN: THE TEXT IS TO BE 1/2" THICK DIMENSIONAL TEXT AND OUTLINED IN BRUSHED STAINLESS STEEL.
	NOTE: NOT IN ELEVATIONS - TO BE PROVIDED AS NECESSARY. BY OWNER.
8D	"THE BEER CAVE" SIGN/GRAPHIC: THE BACKGROUND OVAL IS TO BE MADE OF BRUSHED STAINLESS STEEL (OR ALUMINUM).
	"THE BEER CAVE" TEXT IS TO BE 2" THICK DIMENSIONAL TEXT AND PAINTED ON ALL SIDES.
	THE 3 SNOW FLAKES ARE TO BE AT 3 DIFFERENT DEPTHS AND THE ARE TO HAVE BLUE LED HALO LIGHTING PLACED BEHIND
	EACH INDIVIDUAL CIRCLE.
9D	ICE WALL GRAPHIC: IS TO BE A DIGITALLY PRINTED WALL GRAPHIC WRAP TO BE APPLIED TO THE INTERIOR WALLS OF THE
	BEER CAVE. MAKE SURE ALL ASSEMBLY ELEMENTS ARE ADAPTABLE FOR CONSTANT COLD TEMPERATURES.

GENERAL NOTES

REFER TO SHEETS A1.01 AND A2.01 "GENERAL NOTES"

REFER TO SHEET A2.01 "EXTERIOR FINISH SCHEDULE"

INTERIOR FINISH NOTES

1. ROUTE ALL ELECTRICAL COMPONENTS TO DECORATIVE LIGHTING OUT OF CUSTOMER'S VIEW.
2. ALUMINUM KICK PLATES AT BOTH THE INSIDE AND OUTSIDE OF REST ROOM DOORS (BY OWNER)
3. ALL FIXTURES ON DOORS TO BE US26D DULL CHROMIUM, UNLESS OTHERWISE SPECIFIED.
4. MAIN SALES CABINET TO BE FINISHED IN (L1) ON EMPLOYEE SERVICE SIDE AND SUPPORT AREAS.
5. COOLER DOORS TO BE FACTORY FINISHED BLACK FRAMES.
6. SALES FLOOR GONDOLAS TO BE FACTORY FINISHED BLACK.
7. ALL FLOOR TILE GROUT TO HAVE "GROUT BOOST."
8. EXPOSED DUCTWORK MUST BE PRIMED AND PAINTED BEFORE CEILING IS PAINTED.
9. CONTRACTOR SHALL CAULK DOOR JAMBS INSIDE RESTROOMS WITH SANDED CAULK PROVIDED BY LOUISVILLE TILE. ALL OTHER DOOR JAMBS AND MARLITE TO BE CAULKED WITH SHERWIN WILLIAMS POWER HOUSE 60 YR, COLOR: TO MATCH GROUT
10. ALL GYPSUM BOARD WALLS SHALL BE PAINTED.
11. PAINT EXPOSED STRUCTURE.
12. PROVIDE AND INSTALL RONDEC MTL TRIM AT ALL OUTSIDE TILE CORNERS AND WHERE NOTED ON INTERIOR ELEVATIONS.
13. "GROUT BOOST" TO BE USED TO MIX GROUT INSTEAD OF WATER.
14. ALL EXTERIOR BOLLARDS SHALL BE PAINTED BY NEWCOMB OIL CO.
15. INSTALL WHITE CAULK AT ALL WALL TO CEILING JOINTS.
16. TOP OF "WTS" TILE SHALL BE APPROXIMATELY 41" ABOVE FINISH FLOOR TO PREVENT THIN CUT TILE AT FLOOR AND CEILING. THE 41" DIMENSION CAN BE ADJUSTED SLIGHTLY TO ACHIEVE NO LESS THAN HALF A TILE AT THE FLOOR AND CEILING.

EXTERIOR FINISH NOTES

1. PROVIDE MATERIAL COLOR & FINISH SAMPLES FOR APPROVAL (BY OWNER)
2. PROVIDE LOW WEEP VENTS IN VENEER MASONRY, 24" O.C. MAX. USE 3/8" HONEYCOMB VENT
3. MASONRY EXPANSION JOINTS: PROVIDE SANDED SEALANT (MATCH MORTAR) W/ COMPRESSIBLE BACKER. SEALANT TO COMPLY W/ ASTM C290, CLASS 50 SPECIFICATIONS.
4. SIGNAGE: COORDINATE SIGN SIZE, POWER REQUIREMENTS, AND LAYOUT WITH SUPPLIER PRIOR TO INSTALLATION OF STOREFRONT.
5. CANOPY: REFER TO STRUCTURAL FOR REQUIRED LOADING. CANOPY & DOWNSPOUTS SHOWN FOR REFERENCE. FINAL DESIGN & DETAILING BY CANOPY SUPPLIER. SUBMIT TO OWNER FOR APPROVAL.
6. ALL DOWNSPOUTS TO BE SLEEVED AND ROUTED BELOW GRADE. COORDINATE WITH CIVIL FOR COLLECTION AND MANAGEMENT OF WATER ON SITE.
7. GUTTERS SHALL BE TESTED FOR LEAKS BY DAMMING ALL DOWNSPOUTS AND FILLING GUTTERS WITH 2" (APPROX.) OF WATER.
8. REFER TO FINISH SCHEDULE FOR HM DOOR AND FRAME PAINT COLORS.
9. BOTTOM ALUMINUM SILL SHALL MEASURE 4-13/16" INSTEAD OF 2-1/4". THIS IS TO ALLOW THE TILE ON THE RAISED FLOOR TO BUTT UP AGAINST THE SILL INSTEAD OF HAVING A TILE/GAP ISSUE.

ALUMINUM STOREFRONT: AS MANUFACTURED BY TRULITE
2" X 4-1/2" THERMALLY BROKEN, DARK BRONZE ANODIZED, CENTER GLAZED

INSULATED GLASS:
1" INSULATED, SOLAR BRONZE, (HEAT STRENGTHENED) OVER "GUARDIAN SUNGUARD SN-68". FULLY TEMPERED BOTH LIGHTS AS REQUIRED BY CODE.

INSULATED PANELS:
1" INSULATED, DARK BRONZE, "CITADEL GLAZEGUARD 1000 WR", - PRE-FINISHED TEXTURED ALUMINUM SKINS .010", HIGH DENSITY POLYPROPYLENE STABILIZERS, EXPANDED POLYSTYRENE FOAM (EPS) CORE 5/8"

GRAPHICS SCHEDULE / DESCRIPTION NOTES

CONTACT PARAGON FOR ORIGINAL ARTWORK

1. DETERMINE ALL GRAPHIC APPLICATIONS BY USING FIELD DIMENSIONS ONLY.
2. NO GRAPHIC SUBSTITUTIONS ARE ALLOWED WITHOUT PARAGON SOLUTIONS OR OWNERS CONSENT.
3. REVIEW ALL FINAL PRODUCTION DRAWINGS WITH PARAGON SOLUTIONS PRIOR TO PRODUCTION.
4. PROVIDE INSTALLATION COSTS UNLESS OTHERWISE NOTED.

CMW The Shape of Ideas
Architecture
Civil Engineering
Landscape Architecture
a: 249 East Main Street Suite 100 Lexington, Kentucky 40507
o: (859) 254-6623
w: www.cmwaec.com

BILL PICKERING REGISTERED No. 4915 COMMONWEALTH OF KENTUCKY ARCHITECT
31 MAY 2024

SCHEDULES

FiveStar - #4460 Hopkinsville
NEWCOMB OIL CO., LLC
3070 PEMBROKE RD.
HOPKINSVILLE, KY 42240

CONSTRUCTION DOCUMENTS

Issue Date:	May 29, 2024
Drawn By:	JMT
Checked By:	BP
Revisions:	
	-
	-
	-
	-
	-
Mark	Date

AHJ SEAL

Project Number
24010.01

A3.04

Xrefs: 36X24SHT_Newcomb

File Name: Q:\Newcomb Oil\24010.01 Hopkinsville 6500 LH\02 DWG\03 ARCH\04 CD PHASE\SHEET\A3.04.dwg

PLOT DATE: Tuesday, May 28, 2024 10:35:00 AM

GENERAL NOTES

A. REFER TO SHEETS A1.01 AND A2.01 "GENERAL NOTES"

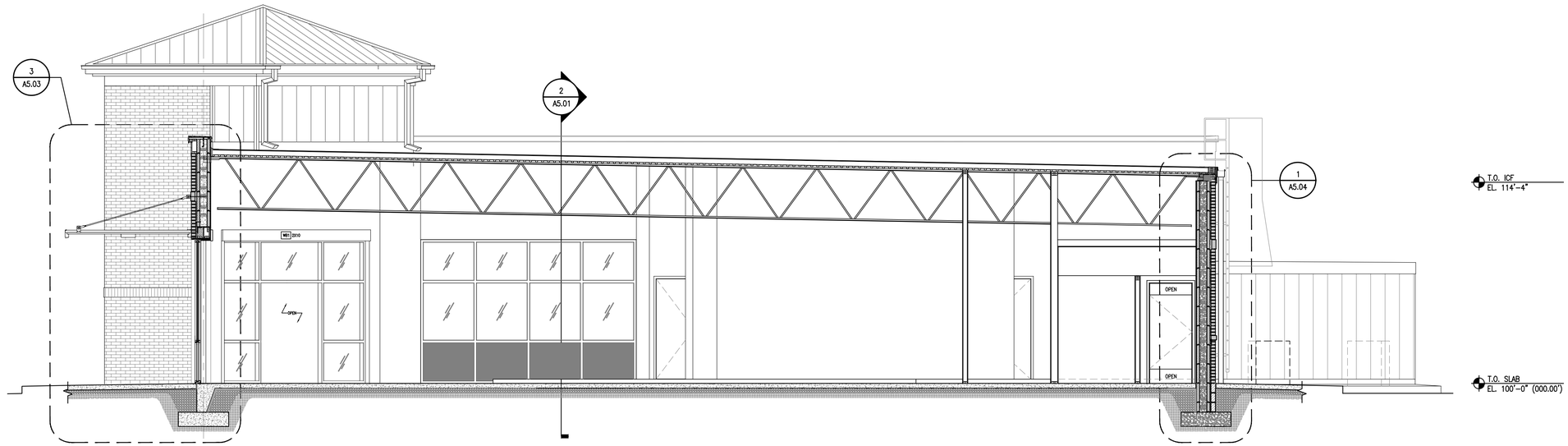

1 A5.01 BUILDING SECTION
1/4" = 1'-0"

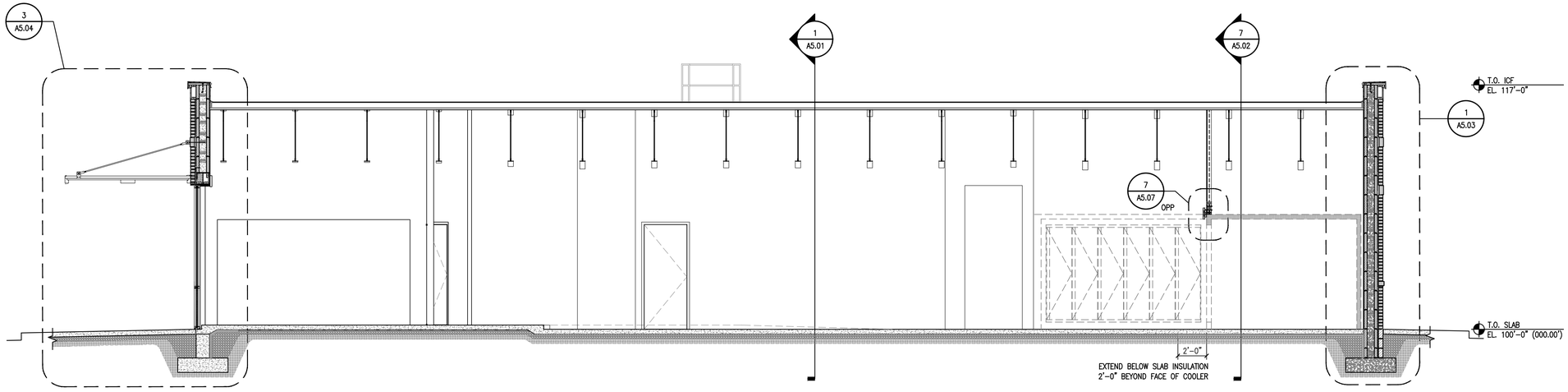

2 A5.01 BUILDING SECTION
1/4" = 1'-0"

CMW
The Shape of Ideas

Architecture
Civil Engineering
Landscape Architecture
a: 249 East Main Street
Suite 100
Lexington, Kentucky 40507
o: (859) 254-6623
w: www.cmwsec.com

BILL PICKERING
REGISTERED
No.
19115
COMMONWEALTH OF KENTUCKY
ARCHITECT
31 MAY 2024

BUILDING SECTIONS

FiveStar - #4460 Hopkinsville
NEWCOMB OIL CO., LLC
3070 PEMBROKE RD.
HOPKINSVILLE, KY 42240

CONSTRUCTION DOCUMENTS

Issue Date:	May 29, 2024
Drawn By:	JMT
Checked By:	BP

Revisions:	
	-
	-
	-
	-
	-
Mark	Date

AHJ SEAL

Project Number
24010.01

A5.01

Xrefs: A-SEC01_6500.rvt A-SEC02_6500.rvt 36X24SHT_Newcomb
File Name: Q:\Newcomb Oil\24010.01 Hopkinsville 6500 LH\02 DWG\03 ARCH\04 CD PHASE\SHEET\A5.01.dwg
PLOT DATE: Friday, June 21, 2024 12:35:36 PM

GENERAL NOTES

A. REFER TO SHEETS A1.01 AND A2.01 "GENERAL NOTES"

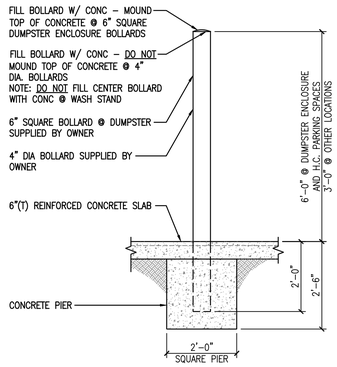

2 A5.02 TYPICAL PIPE BOLLARD DETAIL
1/2" = 1'-0"

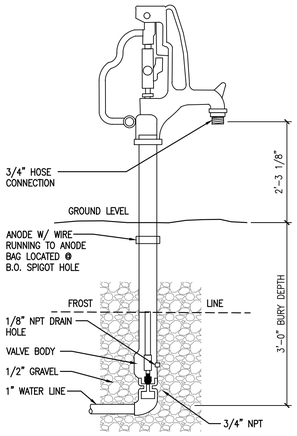

3 A5.02 TYPICAL YARD SPIGOT
N.T.S.

4 A5.02 NOT USED
1/2" = 1'-0"

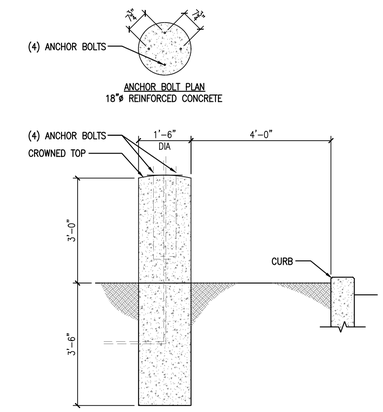

5 A5.02 TYPICAL LIGHT POLE DETAIL
1/2" = 1'-0"

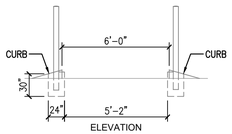

1 A5.02 NOT USED
3/8" = 1'-0"

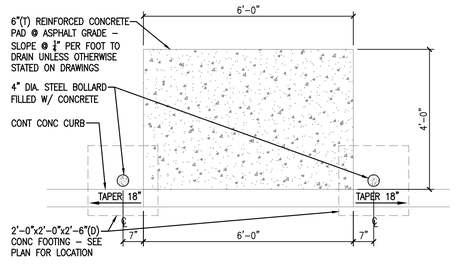

6 A5.02 AIR & WATER CONCRETE PAD
1/2" = 1'-0"

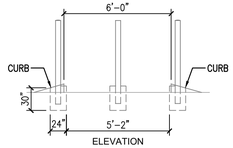

8 A5.02 WASH STAND
1/2" = 1'-0"

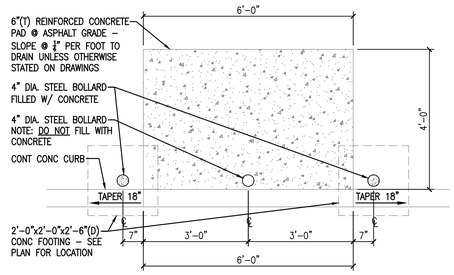

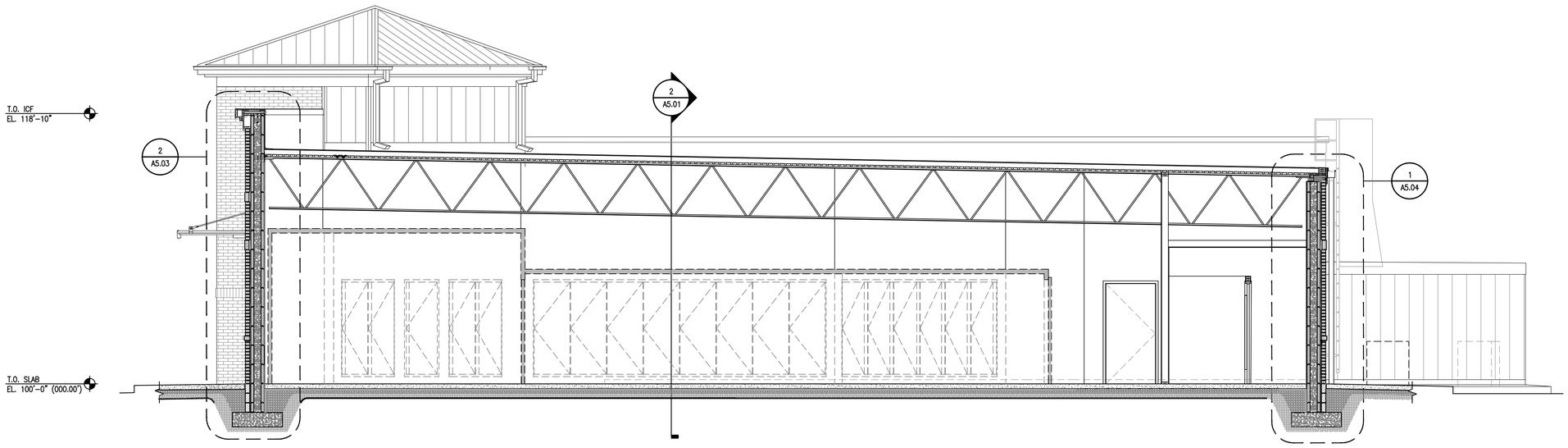

7 A5.02 BUILDING SECTION
1/4" = 1'-0"

CMW The Shape of Ideas
Architecture
Civil Engineering
Landscape Architecture
a: 249 East Main Street
Suite 100
Lexington, Kentucky 40507
o: (859) 254-6623
w: www.cmwsec.com

BILL PICKERING REGISTERED No. 19115 COMMONWEALTH OF KENTUCKY ARCHITECT
31 MAY 2024

BUILDING SECTIONS / DUMPSTER ENCLOSURE

FiveStar - #4460 Hopkinsville
NEWCOMB OIL CO., LLC
3070 PEMBROKE RD.
HOPKINSVILLE, KY 42240

CONSTRUCTION DOCUMENTS

Issue Date:	May 29, 2024
Drawn By:	JMT
Checked By:	BP

Revisions:	
	-
	-
	-
	-
	-
Mark	Date

AHJ SEAL

Project Number
24010.01

A5.02

Xrefs: A-SIG03_6500LH A3G24SIT_Newcomb

File Name: Q:\Newcomb Oil\24010.01 Hopkinsville 6500 LH\02 DWG\03 ARCH\04 CD PHASE\SHEET\A5.02.dwg

PLOT DATE: Tuesday, May 28, 2024 10:36:06 AM

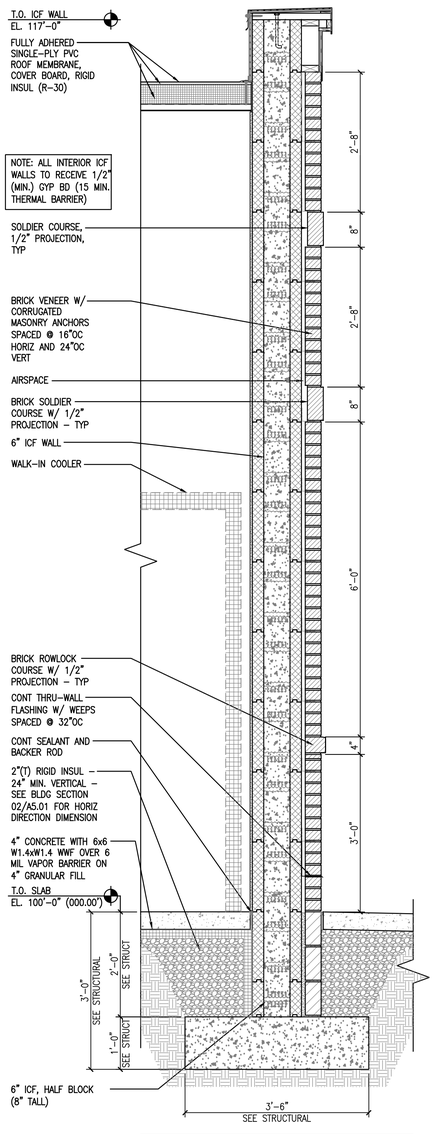

NOTE: BOTTOM OF FOOTING EXCAVATION TO BE INSPECTED AND APPROVED BY SPECIAL INSPECTION AGENCY PRIOR TO REBAR INSTALLATION AND PRIOR TO CONCRETE PLACEMENT

1 A5.03 WALL SECTION
3/4" = 1'-0"

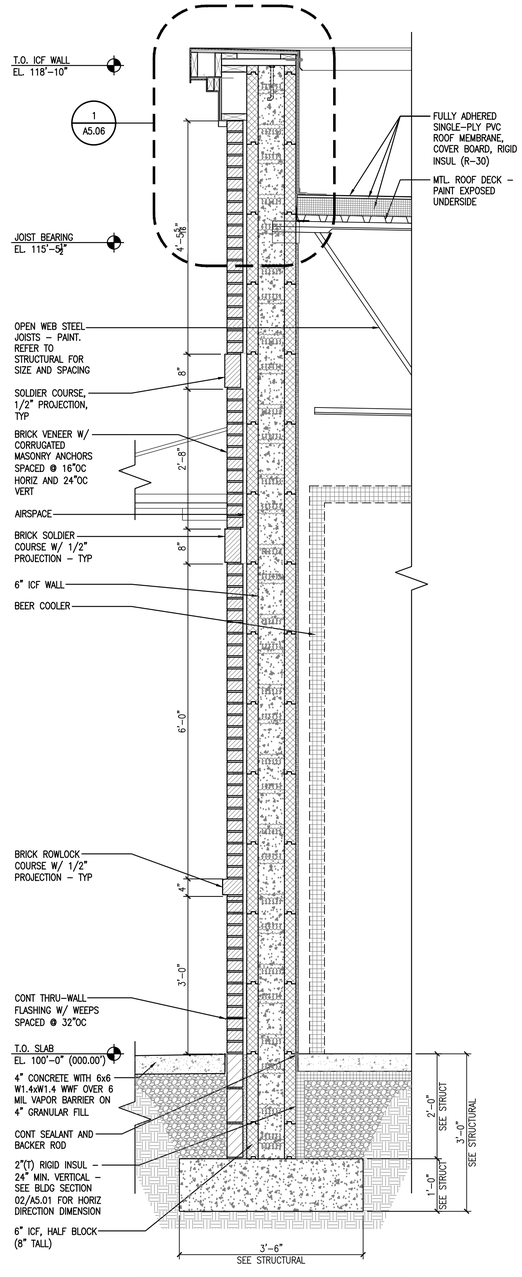

NOTE: BOTTOM OF FOOTING EXCAVATION TO BE INSPECTED AND APPROVED BY SPECIAL INSPECTION AGENCY PRIOR TO REBAR INSTALLATION AND PRIOR TO CONCRETE PLACEMENT

2 A5.03 WALL SECTION
3/4" = 1'-0"

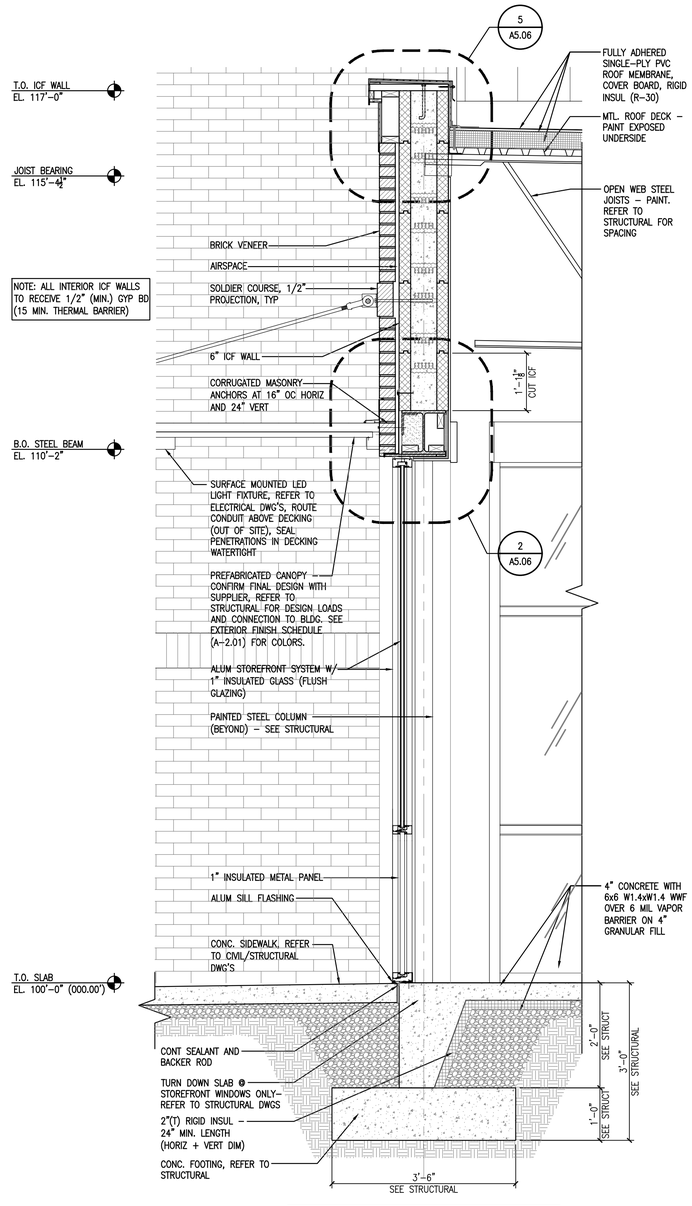

NOTE: BOTTOM OF FOOTING EXCAVATION TO BE INSPECTED AND APPROVED BY SPECIAL INSPECTION AGENCY PRIOR TO REBAR INSTALLATION AND PRIOR TO CONCRETE PLACEMENT

3 A5.03 WALL SECTION
3/4" = 1'-0"

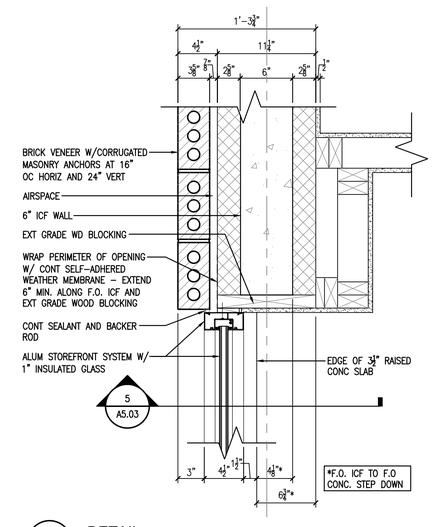

4 A-5.03 DETAIL
1 1/2" = 1'-0"

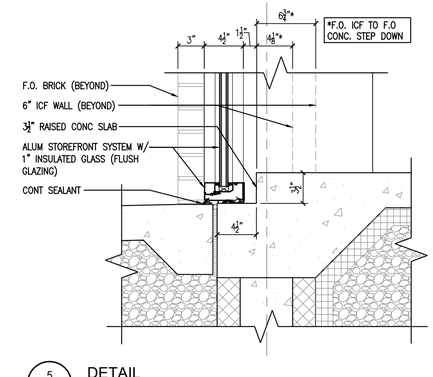

5 A-5.03 DETAIL
1 1/2" = 1'-0"

CMW The Shape of Ideas
Architecture
Civil Engineering
Landscape Architecture
a: 249 East Main Street
Suite 100
Lexington, Kentucky 40507
o: (859) 254-6623
w: www.cmwsec.com

BILL PICKERING REGISTERED No. 7915 COMMONWEALTH OF KENTUCKY ARCHITECT
31 MAY 2024

WALL SECTIONS

FiveStar - #4460 Hopkinsville
NEWCOMB OIL CO., LLC
3070 PEMBROKE RD.
HOPKINSVILLE, KY 42240

CONSTRUCTION DOCUMENTS

Issue Date:	May 29, 2024
Drawn By:	JMT
Checked By:	BP

Revisions:

Mark	Date
-	
-	
-	
-	
-	

AHJ SEAL

Project Number
24010.01

A5.03

Xrefs: 36X24SHT_Newcomb A-SEC03_6500LH A-SEC02_6500LH A-SEC01_6500LH
File Name: Q:\Newcomb Oil\24010.01 Hopkinsville 6500 LH\02 DWG\03 ARCH\04 CD PHASE\SHEET\A5.03.dwg
PLOT DATE: Friday, June 21, 2024 12:33:19 PM

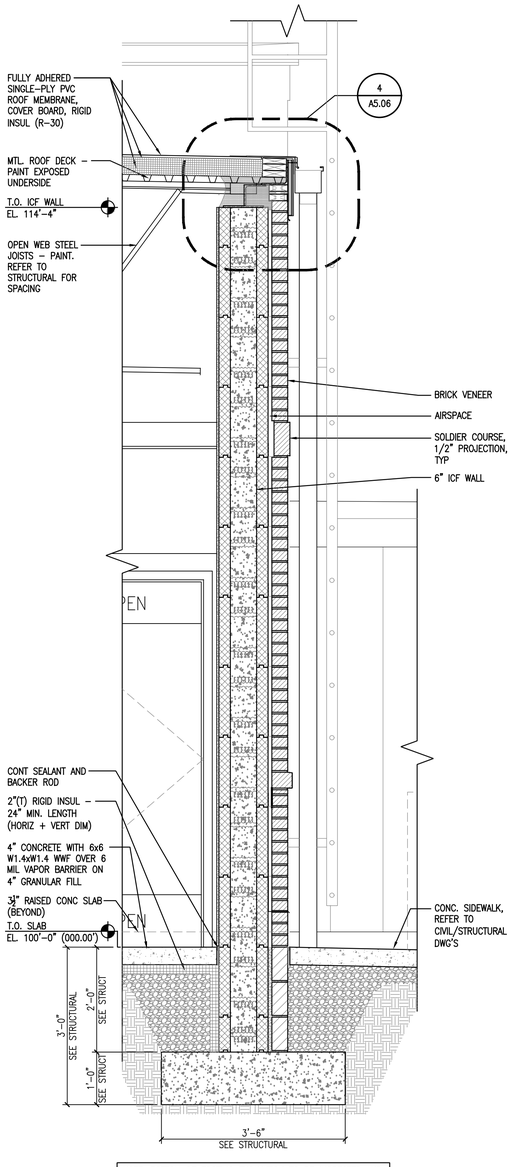

NOTE: BOTTOM OF FOOTING EXCAVATION TO BE INSPECTED AND APPROVED BY SPECIAL INSPECTION AGENCY PRIOR TO REBAR INSTALLATION AND PRIOR TO CONCRETE PLACEMENT

1 A5.04 WALL SECTION
3/4" = 1'-0"

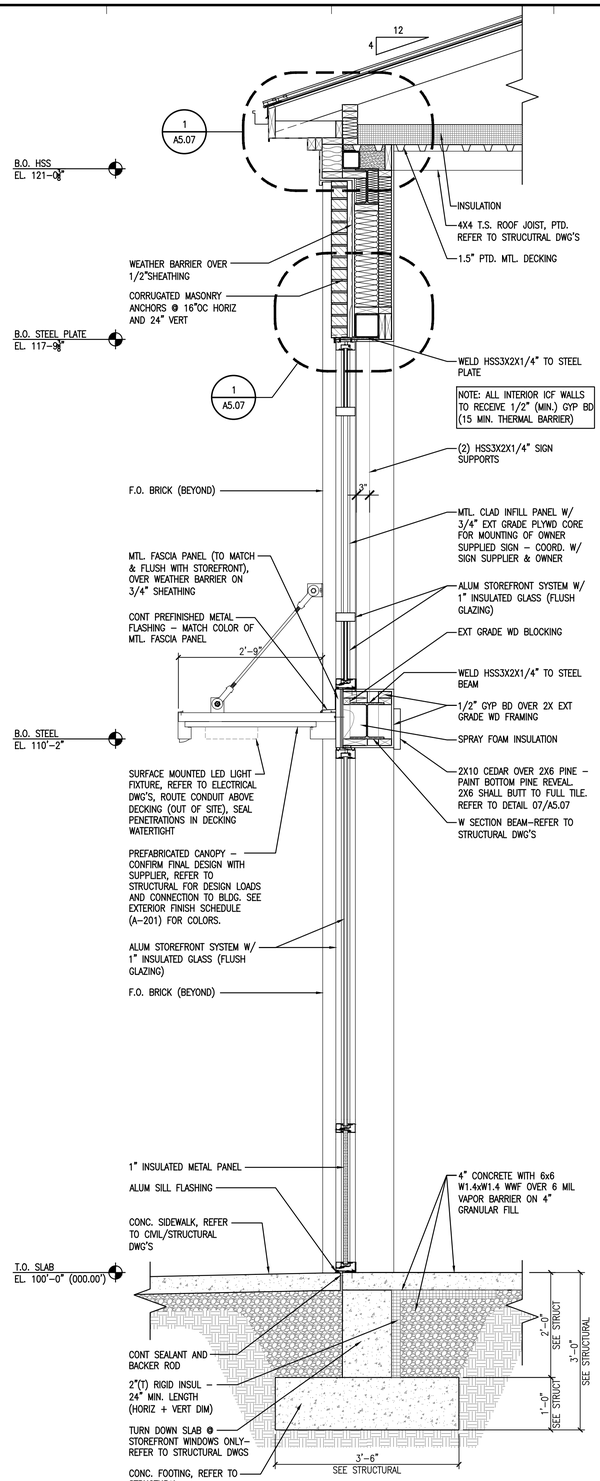

NOTE: BOTTOM OF FOOTING EXCAVATION TO BE INSPECTED AND APPROVED BY SPECIAL INSPECTION AGENCY PRIOR TO REBAR INSTALLATION AND PRIOR TO CONCRETE PLACEMENT

2 A5.04 WALL SECTION
3/4" = 1'-0"

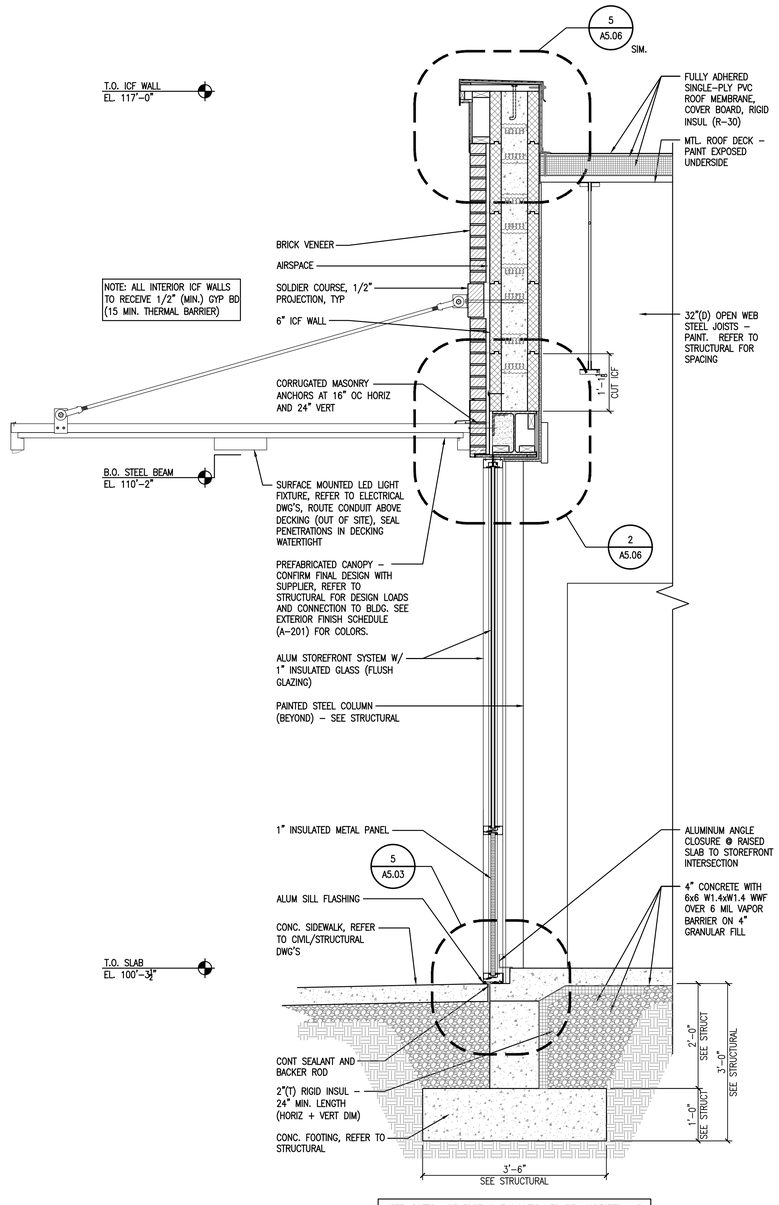

NOTE: BOTTOM OF FOOTING EXCAVATION TO BE INSPECTED AND APPROVED BY SPECIAL INSPECTION AGENCY PRIOR TO REBAR INSTALLATION AND PRIOR TO CONCRETE PLACEMENT

3 A5.04 WALL SECTION
3/4" = 1'-0"

CMW
The Shape of Ideas
Architecture
Civil Engineering
Landscape Architecture
a: 249 East Main Street
Suite 100
Lexington, Kentucky 40507
o: (859) 254-6623
w: www.cmwsec.com

BILL PICKERING
REGISTERED
No. 4915
COMMONWEALTH OF KENTUCKY
ARCHITECT
31 MAY 2024

WALL SECTIONS

FiveStar - #4460 Hopkinsville
NEWCOMB OIL CO., LLC
3070 PEMBROKE RD.
HOPKINSVILLE, KY 42240

CONSTRUCTION DOCUMENTS

Issue Date:	May 29, 2024
Drawn By:	JMT
Checked By:	BP
Revisions:	
	-
	-
	-
	-
	-
Mark	Date

AHJ SEAL

Project Number
24010.01

A5.04

Xrefs: 36X24SHT_Newcomb A-SEC02_6500LH A-SEC01_6500LH
File Name: Q:\Newcomb Oil\24010.01 Hopkinsville 6500 LH\02 DWG\03 ARCH\04 CD PHASE\SHEET\A5.04.dwg
PLOT DATE: Friday, June 21, 2024 12:29:32 PM

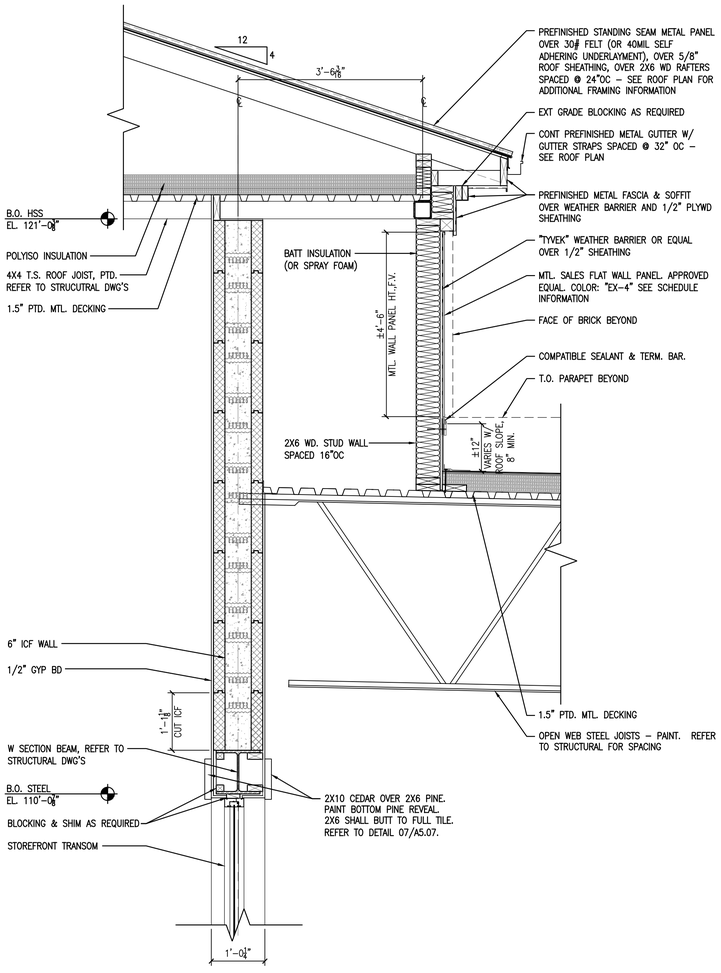

1 A5.05 WALL SECTION
3/4" = 1'-0"

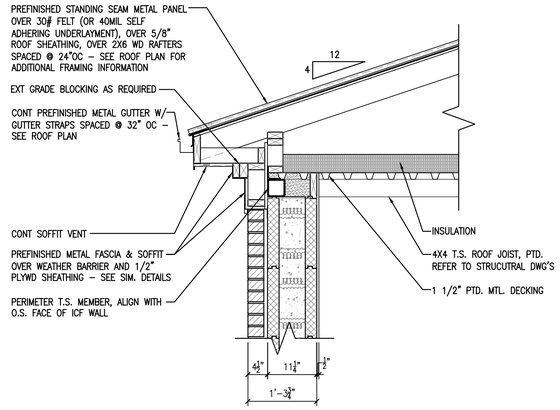

3 A5.05 WALL SECTION
3/4" = 1'-0"

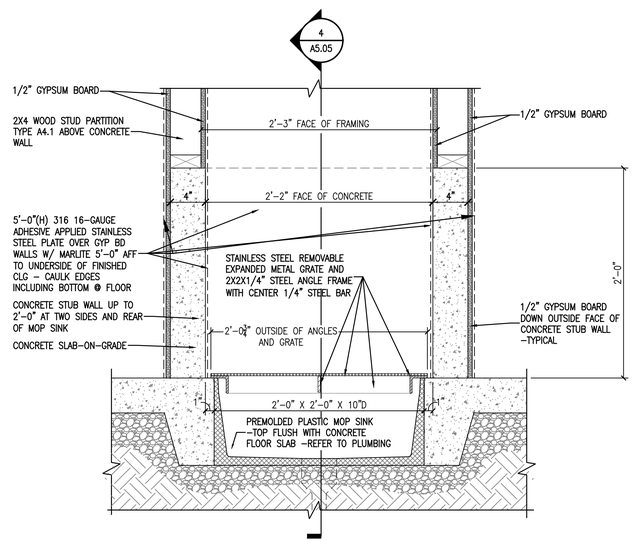

2 A5.05 SECTION - FLOOR MOP SINK
1 1/2" = 1'-0"

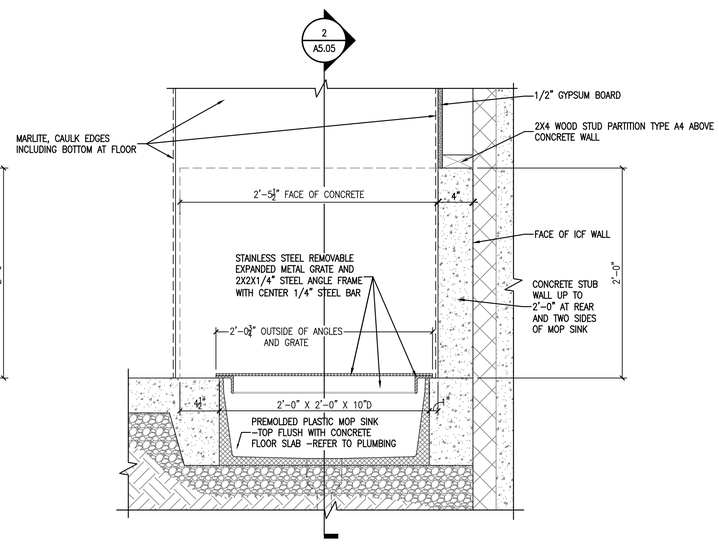

4 A5.05 SECTION - FLOOR MOP SINK
1 1/2" = 1'-0"

CMW The Shape of Ideas
Architecture
Civil Engineering
Landscape Architecture
a: 249 East Main Street
Suite 100
Lexington, Kentucky 40507
o: (859) 254-6623
w: www.cmwsec.com

BILL PICKERING REGISTERED No. 4915 COMMONWEALTH OF KENTUCKY ARCHITECT
31 MAY 2024

WALL SECTIONS AND DETAILS

FiveStar - #4460 Hopkinsville
NEWCOMB OIL CO., LLC
3070 PEMBROKE RD.
HOPKINSVILLE, KY 42240

CONSTRUCTION DOCUMENTS

Issue Date:	May 29, 2024
Drawn By:	JMT
Checked By:	BP
Revisions:	
	-
	-
	-
	-
	-
Mark	Date

AHJ SEAL

Project Number
24010.01

A5.05

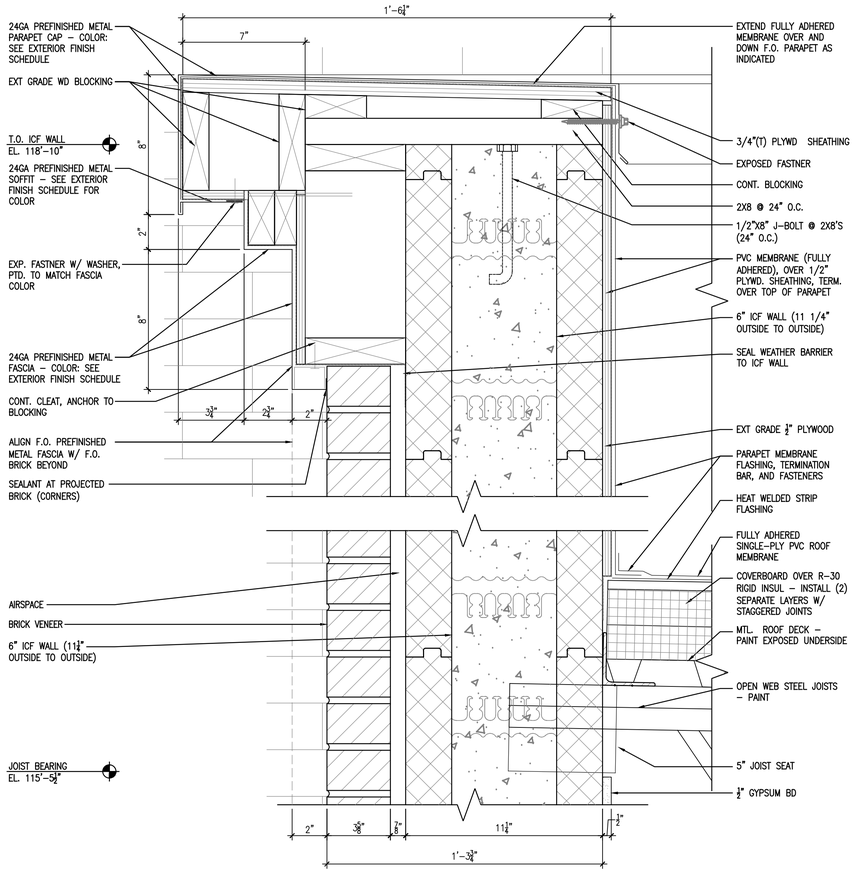

1 A5.06 ROOF DETAIL
3" = 1'-0"

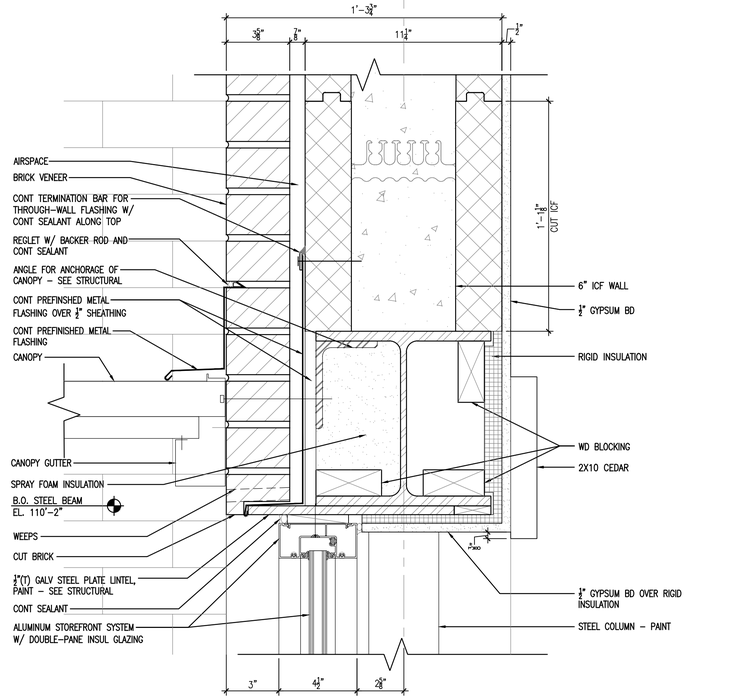

2 A5.06 ENLARGED DETAIL
3" = 1'-0"

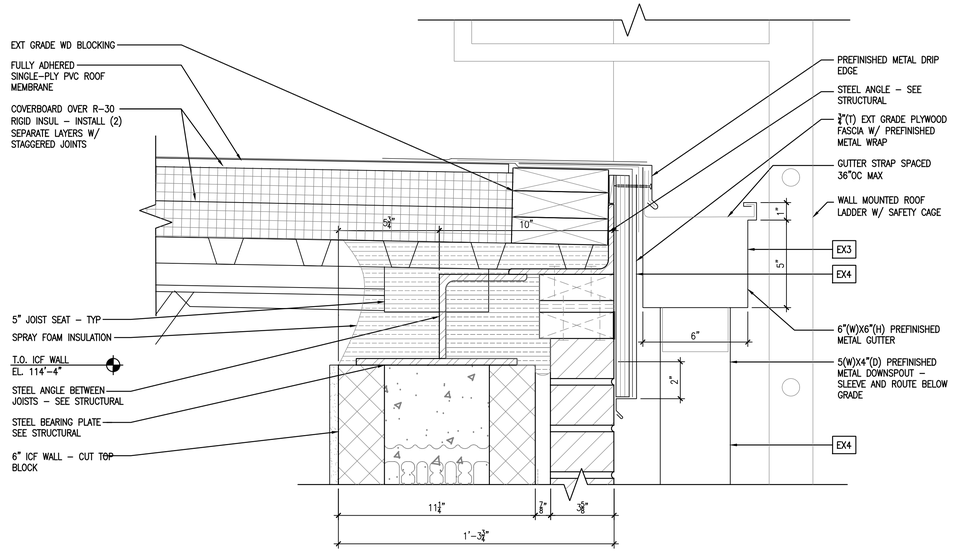

4 A5.06 ROOF DETAIL
3" = 1'-0"

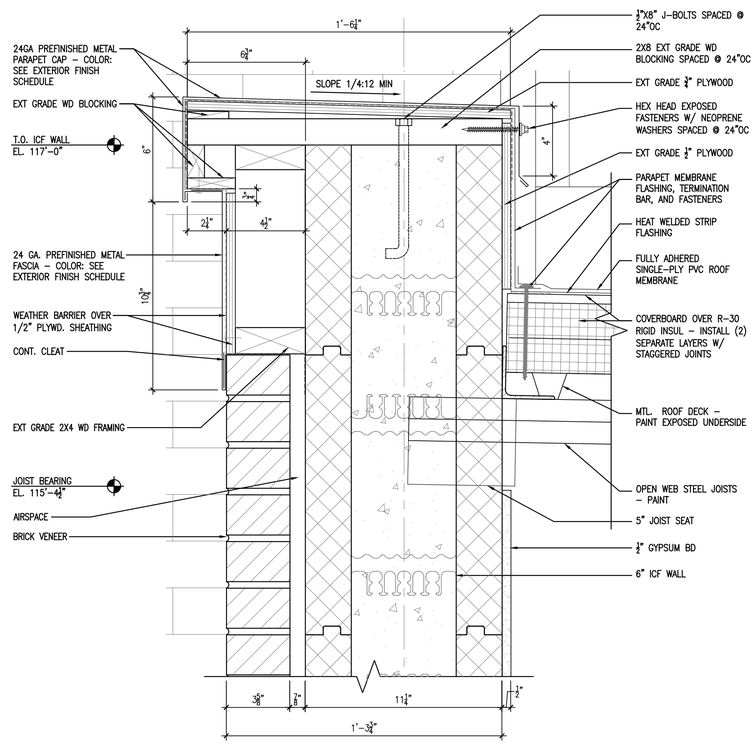

5 A5.06 PARAPET DETAIL
3" = 1'-0"

CMW The Shape of Ideas

Architecture
Civil Engineering
Landscape Architecture
a: 249 East Main Street
Suite 100
Lexington, Kentucky 40507
o: (859) 254-6623
w: www.cmwsec.com

BILL PICKERING REGISTERED No. 4915 COMMONWEALTH OF KENTUCKY ARCHITECT
31 MAY 2024

ENLARGED DETAILS

FiveStar - #4460 Hopkinsville
NEWCOMB OIL CO., LLC
3070 PEMBROKE RD.
HOPKINSVILLE, KY 42240

CONSTRUCTION DOCUMENTS

Issue Date:	May 29, 2024
Drawn By:	JMT
Checked By:	BP
Revisions:	
	-
	-
	-
	-
	-
Mark	Date

AHJ SEAL

Project Number
24010.01

A5.06

Xrefs: 24X24SHT_Newcomb A-SEC03_6500LH A-SEC01_6500LH
File Name: Q:\Newcomb Oil\24010.01 Hopkinsville 6500 LH\02 DWG\03 ARCH\04 CD PHASE\SHEET\A5.06.dwg
PLOT DATE: Friday, June 21, 2024 12:05:58 PM

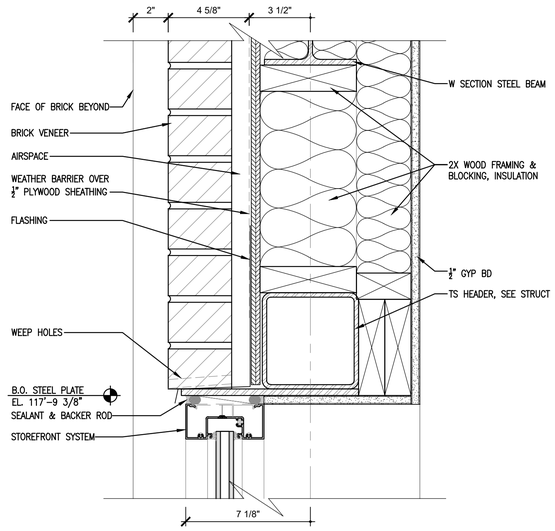

1 A5.07 SECTION DETAIL
3" = 1'-0"

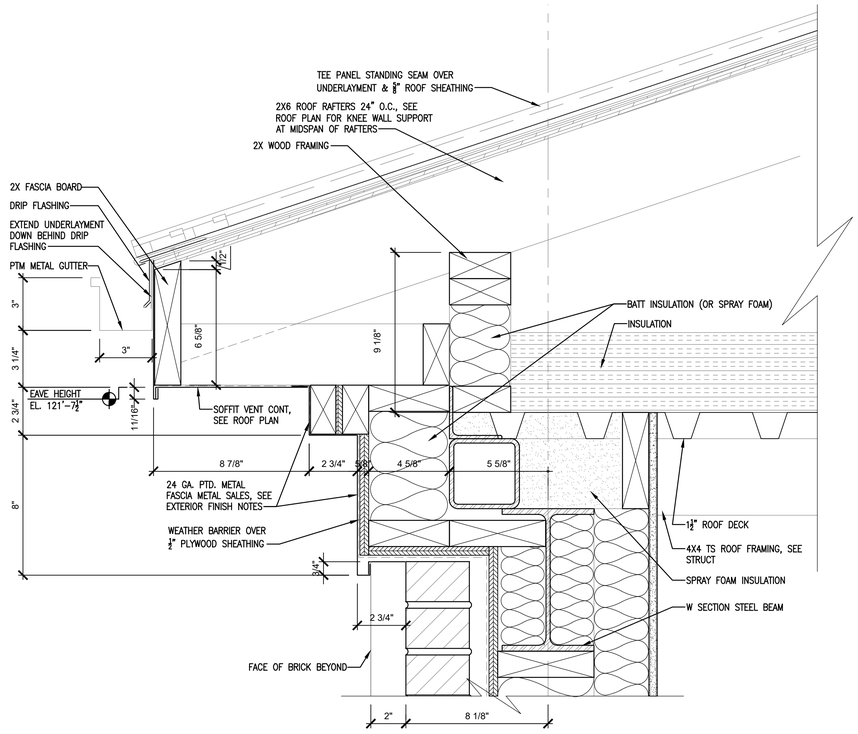

2 A5.07 SECTION DETAIL
3" = 1'-0"

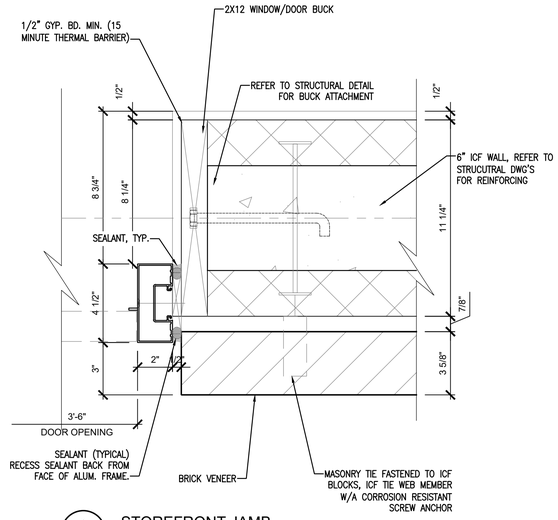

3 A5.07 STOREFRONT JAMB
3" = 1'-0"

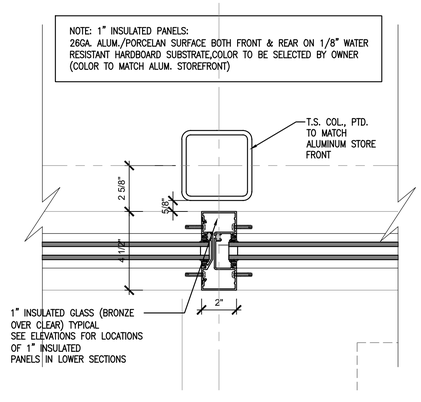

4 A5.07 STOREFRONT JAMB
3" = 1'-0"

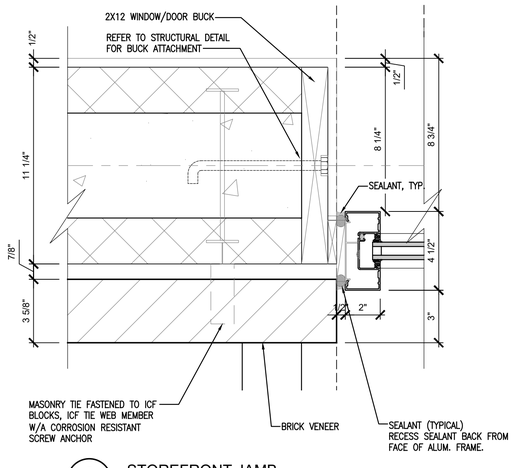

5 A5.07 STOREFRONT JAMB
3" = 1'-0"

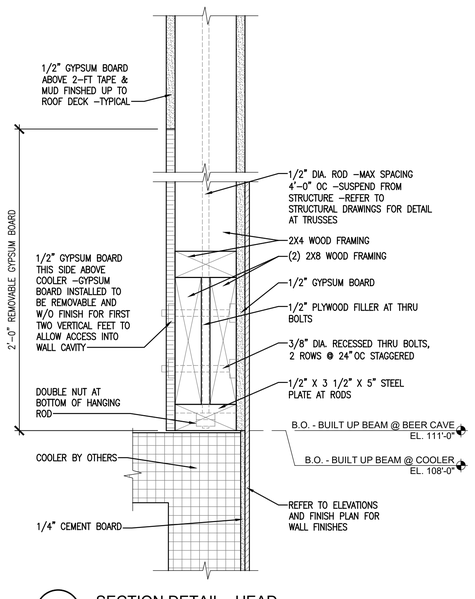

6 A5.07 SECTION DETAIL - HEAD
3" = 1'-0"

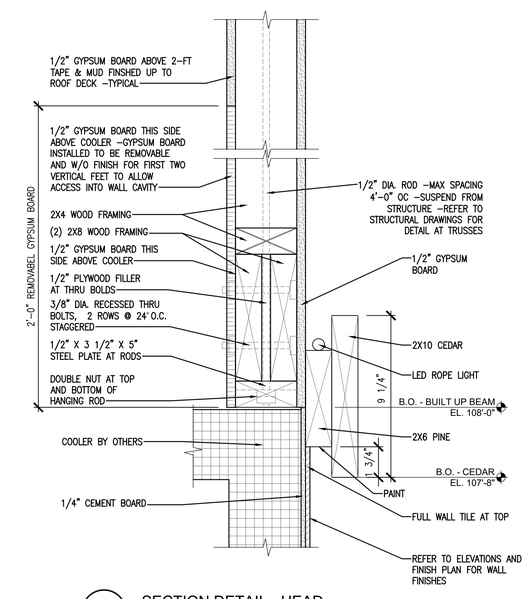

7 A5.07 SECTION DETAIL - HEAD
3" = 1'-0"

CMW
The Shape of Ideas
Architecture
Civil Engineering
Landscape Architecture
a: 249 East Main Street
Suite 100
Lexington, Kentucky 40507
o: (859) 254-6623
w: www.cmwaec.com

BILL PICKERING
REGISTERED
No. 4915
COMMONWEALTH OF KENTUCKY
ARCHITECT
31 MAY 2024

ENLARGED DETAILS

FiveStar - #4460 Hopkinsville
NEWCOMB OIL CO., LLC
3070 PEMBROKE RD.
HOPKINSVILLE, KY 42240

CONSTRUCTION DOCUMENTS

Issue Date:	May 29, 2024
Drawn By:	JMT
Checked By:	BP

Revisions:

	-
	-
	-
	-
	-
Mark	Date

AHJ SEAL

Project Number
24010.01

A5.07

Xrefs: 36X24ANSI_Newcomb A-FP01_E500.H
File Name: Q:\Newcomb Oil\24010.01 Hopkinsville 6500 LH\02 DWG\03 ARCH\04 CD PHASE\SHEET\A5.07.dwg
PLOT DATE: Tuesday, May 28, 2024 10:40:24 AM

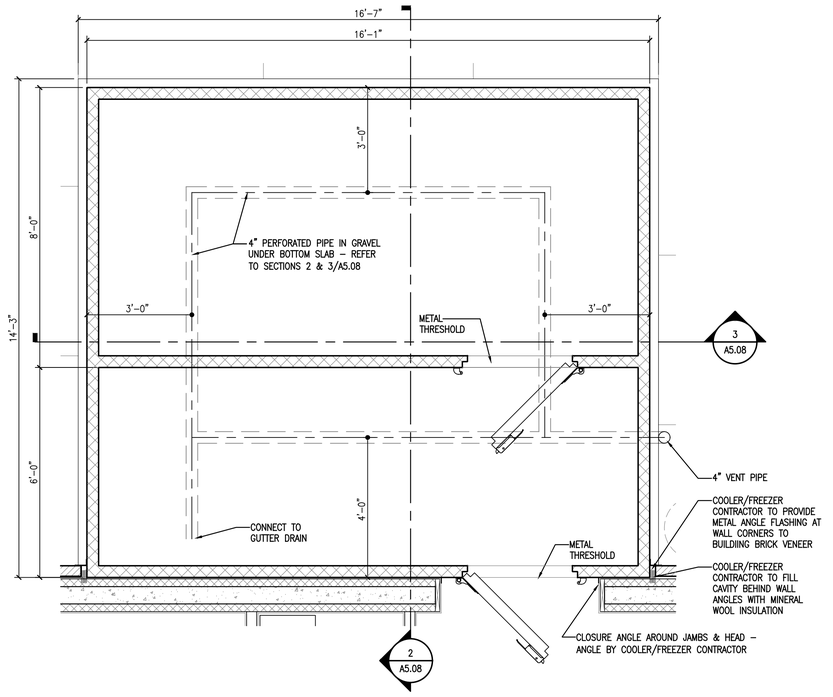

1 A5.08 ENLARGED PLAN - WALK-IN COOLER / FREEZER
1/2" = 1'-0"

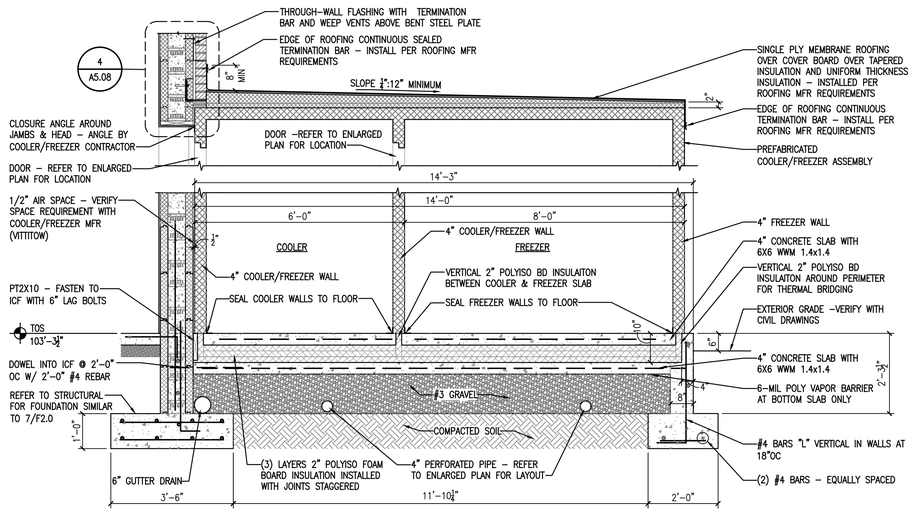

2 A5.08 SECTION - WALK-IN COOLER / FREEZER
1/2" = 1'-0"

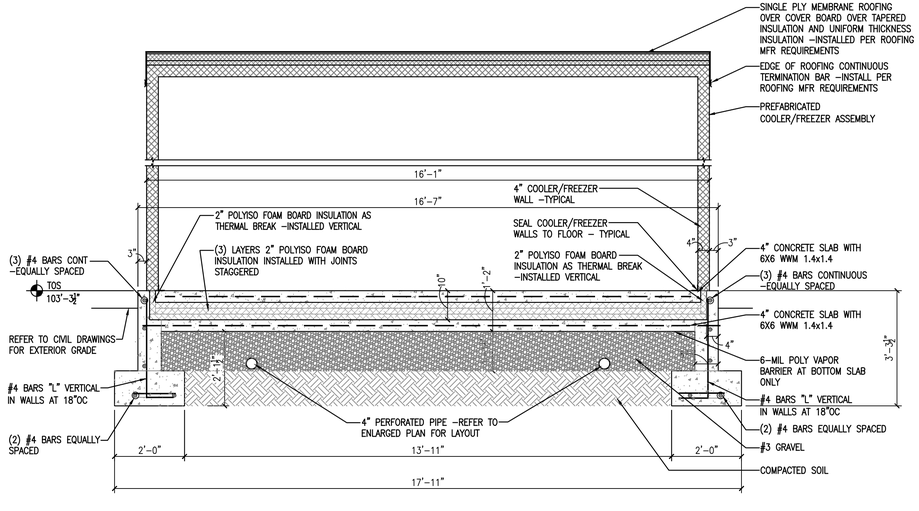

3 A5.08 SECTION - WALK-IN COOLER / FREEZER
1/2" = 1'-0"

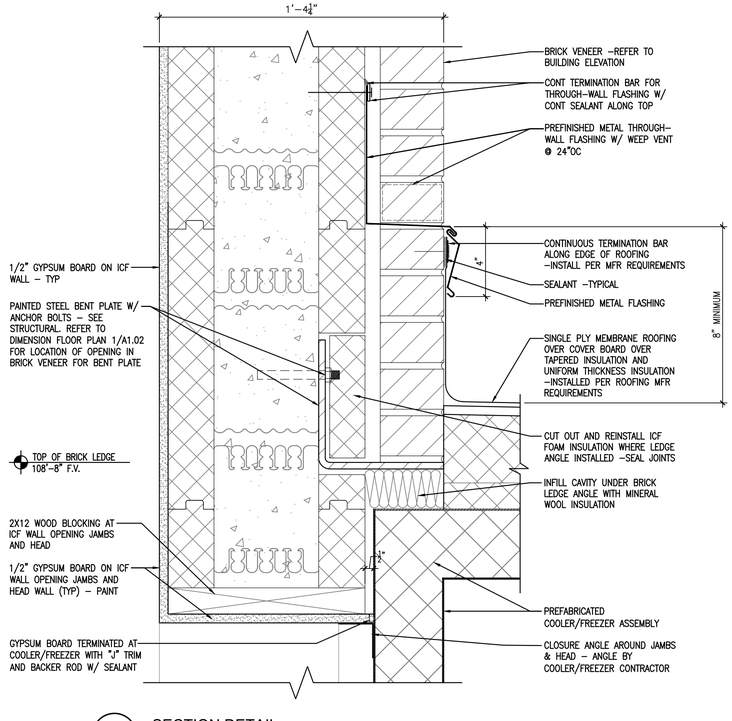

4 A5.08 SECTION DETAIL
3" = 1'-0"

CMW The Shape of Ideas
Architecture
Civil Engineering
Landscape Architecture
a: 249 East Main Street
Suite 100
Lexington, Kentucky 40507
o: (859) 254-6623
w: www.cmwsec.com

BILL PICKERING REGISTERED No. 4915 COMMONWEALTH OF KENTUCKY ARCHITECT
31 MAY 2024

WALK-IN COOLER / FREEZER SECTIONS AND DETAILS

FiveStar - #4460 Hopkinsville
NEWCOMB OIL CO., LLC
3070 PEMBROKE RD.
HOPKINSVILLE, KY 42240

CONSTRUCTION DOCUMENTS

Issue Date:	May 29, 2024
Drawn By:	JTH / JMT
Checked By:	BP
Revisions:	
	-
	-
	-
	-
Mark	Date

AHJ SEAL

Project Number
24010.01

A5.08

Revit: 3A24-SHT_Newcomb A-FP01_6500LH
File Name: Q:\Newcomb Oil\24010.01 Hopkinsville 6500 LH\02 DWG\03 ARCH\04 CD PHASE\SHEET\A5.08.dwg
PLOT DATE: Friday, June 21, 2024 11:19:09 AM

PLUMBING FIXTURE SPECIFICATIONS:

P-1 WATER CLOSET – FLUSH VALVE, FLOOR MOUNTED – STANDARD HEIGHT
AMERICAN STANDARD MODEL 2234.015 "MADERA", VITREOUS CHINA, SIPHON JET, 1⅛" TOP SPUD, ELONGATED BOWL WATER CLOSET WITH CHINA BOLT CAPS AND BEMIS MODEL 1955C WHITE OPEN FRONT SEAT WITH CHECK HINGE. FLUSH VALVE SHALL BE AS FOLLOWS:
– SLOAN OPTIMA MODEL 111-ES-S "REGAL PRO" SENSOR OPERATED 1.6 GPF WATER CLOSET FLUSH VALVE WITH TRANSFORMER AND POLISHED CHROME FINISH.

P-1A WATER CLOSET – FLUSH VALVE, FLOOR MOUNTED – ADA HEIGHT
AMERICAN STANDARD MODEL 3043.102 "MADERA", VITREOUS CHINA, 17" HIGH, SIPHON JET, 1⅛" TOP SPUD, ELONGATED BOWL WATER CLOSET WITH CHINA BOLT CAPS AND BEMIS MODEL 1955C WHITE OPEN FRONT SEAT WITH CHECK HINGE. INSTALL THE FLUSH VALVE ON THE "OPEN" SIDE OF THE WATER CLOSET. FLUSH VALVE SHALL BE AS FOLLOWS:
– SLOAN OPTIMA MODEL 111-ES-S "REGAL PRO" SENSOR OPERATED 1.6 GPF WATER CLOSET FLUSH VALVE WITH TRANSFORMER AND POLISHED CHROME FINISH.

P-2 LAVATORY – BOWL INTEGRAL TO COUNTERTOP – INFRARED FAUCET
REFER TO ARCHITECTURAL DRAWINGS AND SPECIFICATIONS FOR COORDINATION OF LAVATORY BOWL INTEGRAL TO COUNTERTOP. PROVIDE LAVATORY DRAIN WITH INTERGRAL PERFORATED STRAINER, ⅜" RIGID SUPPLIES WITH STOPS AND P-TRAP. LAVATORY TRIM SHALL BE AS FOLLOWS:
--- SENSOR OPERATED FAUCET SHALL BE SLOAN OPTIMA MODEL ETF-600 WITH POLISHED CHROME-PLATED CAST BRASS FAUCET BODY, 0.5 GPM VANDAL RESISTANT AERATOR, MIXING VALVE AND TRANSFORMER.

P-3 URINAL – WALL HUNG – ADA
TOTO MODEL UT105UG VITREOUS CHINA WALL-HUNG, 0.125 GPF URINAL WITH ¾" TOP SPUD AND CONCEALED WALL HANGER BRACKETS. FLUSH VALVE SHALL BE AS FOLLOWS:
– SLOAN OPTIMA MODEL 186-0.125 DBP ESS SENSOR OPERATED 0.125 GPF URINAL FLUSH VALVE WITH TRANSFORMER AND POLISHED CHROME FINISH.

P-4 VORTEX WASH SYSTEM
BI-LINE VORTEX WASH SYSTEM MODEL L-R 36W. FOUR COMPARTMENT TYPE WITH 3HP WASH PUMP AND 5KW ELECTRIC TANK HEAT WITH 208V/3P/60 ELECTRICAL CONNECTION. PROVIDE WITH (3) T&S B-3990 LEVER HANDLE WASTES, P-TRAP, PERFORATED SCRAP BASKETS, UTENSIL BASKET, SHEET PAN RACK, DRAIN AND ESCUTCHEONS. SINK TRIM SHALL BE AS FOLLOWS:
– (2) 3/4" NPT MIXING FAUCETS.
– (1) 1/2" NPT PRE-RINSE SPRAY

P-4A HAND SINK – BOWL INTEGRAL TO COUNTERTOP – GOOSENECK FAUCET
REFER TO ARCHITECTURAL DRAWINGS AND SPECIFICATIONS FOR COORDINATION OF LAVATORY BOWL INTEGRAL TO COUNTERTOP. PROVIDE LAVATORY DRAIN WITH INTERGRAL PERFORATED STRAINER, ⅜" RIGID SUPPLIES WITH STOPS AND P-TRAP. LAVATORY TRIM SHALL BE AS FOLLOWS:
--- GOOSENECK FAUCET SHALL BE MOEN MODEL 8938 "SANI-STREAM" WITH POLISHED CHROME-PLATED CAST BRASS FAUCET BODY, 3-1/2" SPOUT, 2.0 GPM AERATOR AND WRIST BLADE HANDLES.

P-4B HAND SINK – WALL-HUNG
MANSFIELD GRAND ISLE MODEL 2018HBNS VITREOUS CHINA LAVATORY WITH 4" CENTER FAUCET HOLES. PROVIDE CONCEALED ARM CARRIER, LAVATORY DRAIN WITH INTERGRAL PERFORATED STRAINER, ⅜" RIGID SUPPLIES WITH STOPS AND P-TRAP AND ADA COMPLIANT TRAP WRAP. MOUNT LAVATORY AT ADA HEIGHT. LAVATORY TRIM SHALL BE AS FOLLOWS:
--- SINGLE HANDLE FAUCET SHALL BE AMERICAN STANDARD RELIANT 3 MODEL 7385.004 WITH POLISHED CHROME-PLATED CAST BRASS FAUCET BODY WITH 1.2 GPM AERATOR.

P-5 MOP BASIN – 24"x24" – RECESSED IN FLOOR
ZURN MODEL Z1996-24 MOP SERVICE BASIN WITH MOLDED HIGH DENSITY COMPOSIT BASIN, PVC DRAIN BODY, STAINLESS STEEL STRAINER AND 3" GASKETED OUTLET CONNECTION. BASIN SHALL BE RECESSED IN CONCRETE FLOOR. REFERENCE DETAIL ON DRAWING A-551 FOR ADDITIONAL INFORMATION.

P-6 ICE MAKER CONNECTION BOX
IPS CORPORATION WATER-TITE MODEL AB9702HA ICE MAKER OUTLET BOX WITH INTEGRAL WATER HAMMER ARRESTOR AND PRELOADED NAILS. FIELD PAINT EXPOSED PORTION OF BOX TO MATCH ADJACENT WALL SURFACES. VERIFY PIPE CONNECTION TYPE PRIOR TO ORDERING.

HB HOSE BIBB – COLD WATER
WOODFORD MODEL 24 ANTI-SIPHON WALL FAUCET WITH VACUUM BREAKER, REMOVABLE KEYED HANDLE, LOOSE TEE KEY AND ¾" COLD WATER INLET.

HB-1 HOSE BIBB – HOT WATER
WOODFORD MODEL 24 ANTI-SIPHON WALL FAUCET WITH VACUUM BREAKER, WHEEL HANDLE, LOOSE TEE KEY AND ¾" HOT WATER INLET.

HB-2 CONCEALED HOSE BIBB – COLD WATER
WOODFORD MODEL MB24 ANTI-SIPHON WALL FAUCET WITH MODULAR BOX, VACUUM BREAKER, WHEEL HANDLE, LOOSE TEE KEY AND ¾" COLD WATER INLET.

FPWH FREEZE PROOF WALL HYDRANT
WOODFORD MODEL 65 ANTI-SIPHON AUTOMATIC DRAINING FREEZELESS WALL HYDRANT WITH VACUUM BREAKER, LOOSE TEE KEY AND ¾" COLD WATER INLET.

FD-1 FLOOR DRAIN
WATTS MODEL FD12-SQ WITH ADJUSTABLE SQUARE NICKEL BRONZE STRAINER AND 3" BOTTOM OUTLET.

TD-1 TROUGH DRAIN
DRINK STATION TROUGH BY EAGLE GROUP. CHANNEL SHALL BE 24" LONG WITH 5-1/4" WIDE REVEAL. STAINLESS STEEL, FULLY WELDED TROUGH WITH 1/4" SLOPE TO DRAIN. 1-1/2" STAINLESS STEEL DRAIN FULLY WELDED INTO TROUGH. REMOVABLE, STAINLESS STEEL WIRE GRATES TO BE MADE IN (2) 12" SECTIONS WITH 1" SPACING BETWEEN WIRES.

TD-2 TROUGH DRAIN
DRINK STATION TROUGH BY EAGLE GROUP. CHANNEL SHALL BE 96" LONG WITH 5-1/4" WIDE REVEAL. STAINLESS STEEL, FULLY WELDED TROUGH WITH 1/4" SLOPE TO DRAIN. 1-1/2" STAINLESS STEEL DRAIN FULLY WELDED INTO TROUGH. REMOVABLE, STAINLESS STEEL WIRE GRATES TO BE MADE IN 19" SECTIONS OR LESS WITH 1" SPACING BETWEEN WIRES.

PLUMBING LEGEND

ABOVE FINISHED FLOOR	AFF
AREA DRAIN	AD
CLEANOUT	CO
COLD WATER	CW
ELECTRICAL CONTRACTOR	EC
EXTERIOR CLEANOUT (PVC FEMALE ADAPTER W/ BRASS CAP)	ECO
FLOOR DRAIN	FD
FREEZE PROOF WALL HYDRANT	FPWH
GENERAL CONTRACTOR	GC
GREASE INTERCEPTOR	GI
HOSE BIBB	HB
HOT WATER	HW
MECHANICAL CONTRACTOR	MC
OPEN RECEPTACLE	OR
PLUMBING CONTRACTOR	PC
POLYVINYL CHLORIDE	PVC
TYPICAL	TYP
VENT THROUGH ROOF	VTR
WATER HEATER	WH
SANITARY PIPING	SAN
GREASE WASTE PIPING	GL
STORM PIPING	SS
SANITARY VENT PIPING	V
DOMESTIC COLD WATER PIPING	
DOMESTIC HOT WATER PIPING (110° F)	
FILTERED COLD WATER	FCW
NATURAL GAS PIPING	G
PRESSURE GAUGE	P
SOLENOID VALVE	
GAS SHUT-OFF VALVE	
BALL VALVE	
SHUT-OFF VALVE AT EQUIPMENT	
BALL VALVE IN RISER	
PIPING ELBOW (TURNED UP/DOWN)	
PIPING TEE (TURNED UP/DOWN)	

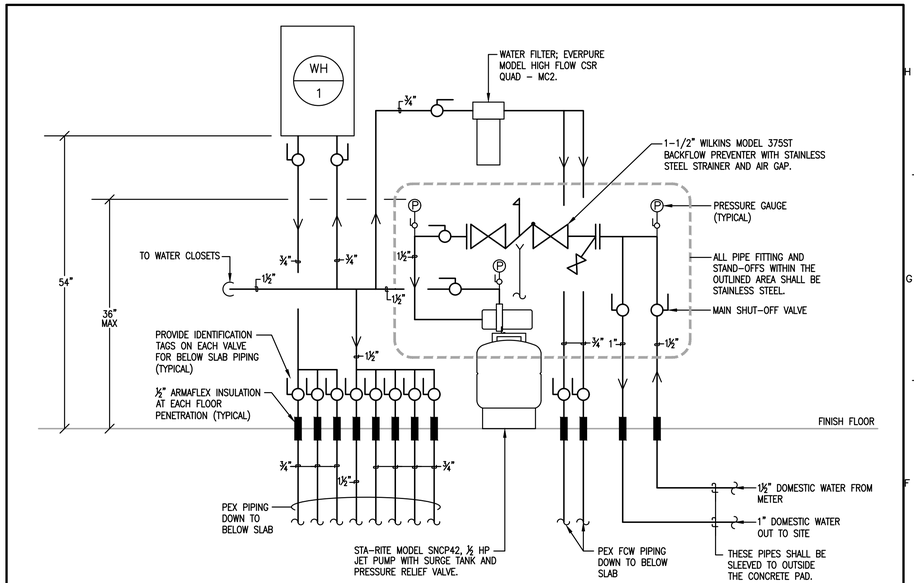

DOMESTIC WATER ENTRY PIPING SCHEMATIC
NOT TO SCALE

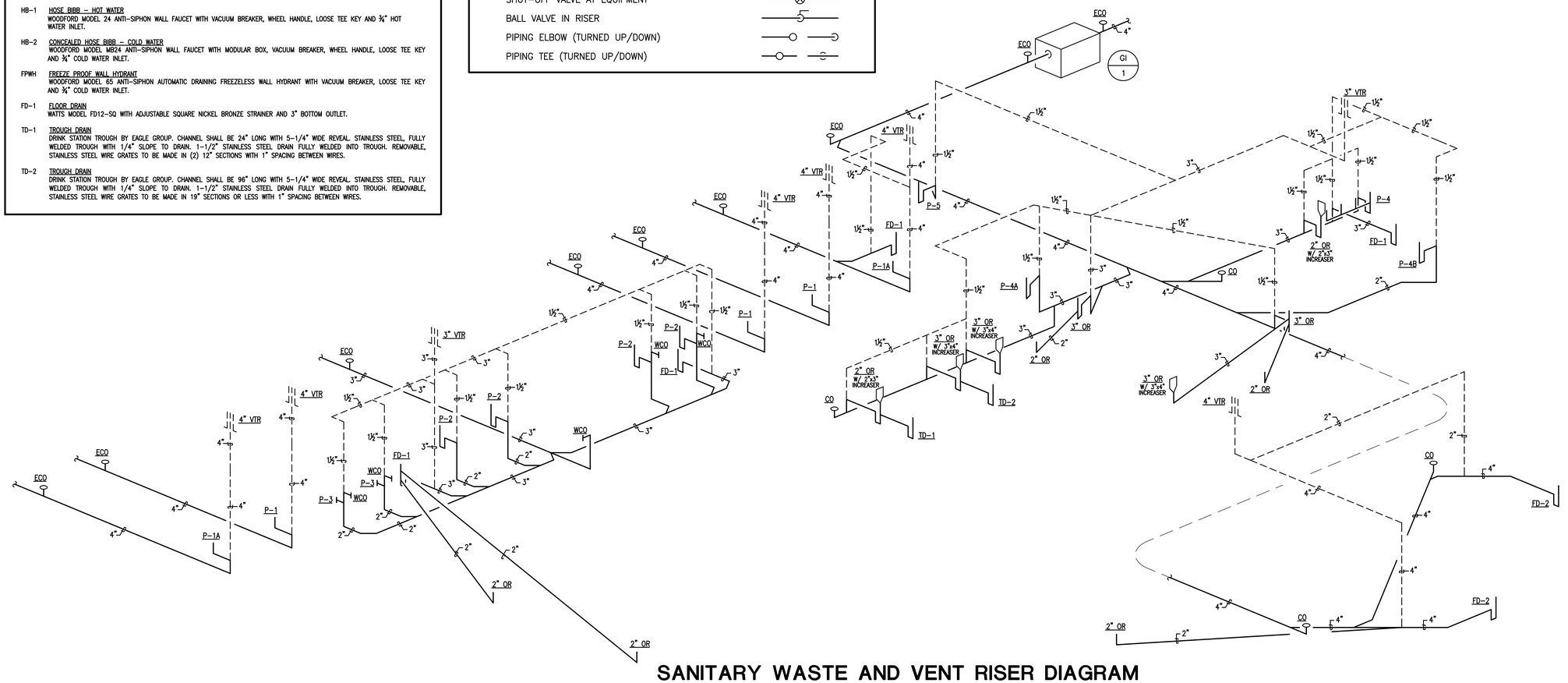

SANITARY WASTE AND VENT RISER DIAGRAM (OPPOSITE HAND FROM FLOOR PLAN)
NOT TO SCALE

1
P1.01

CMW The Shape of Ideas
Architecture
Civil Engineering
Landscape Architecture
a: 249 East Main Street Suite 100 Lexington, Kentucky 40507
o: (859) 254-6623
w: www.cmwaec.com

CMTA
10411 Meeting Street, Prospect, Kentucky 40059
502.326.3585 1.502.326.2991 www.cmta.com

COMMONWEALTH OF KENTUCKY LICENSED PROFESSIONAL ENGINEER 24010 DAVID R. HOLLAND

PLUMBING LEGEND AND DETAILS

FiveStar #4460 Hopkinsville
NEWCOMB OIL CO., LLC
3070 PEMBROKE RD.
HOPKINSVILLE, KY 42240

CONSTRUCTION DOCUMENTS

Issue Date:	May, 29 2024
Drawn By:	WTD
Checked By:	DRH
Revisions:	

Mark	Date

AHJ SEAL

Project Number
24010.01

P-1.01

PLOT DATE: Friday, June 21, 2024 9:19:55 PM

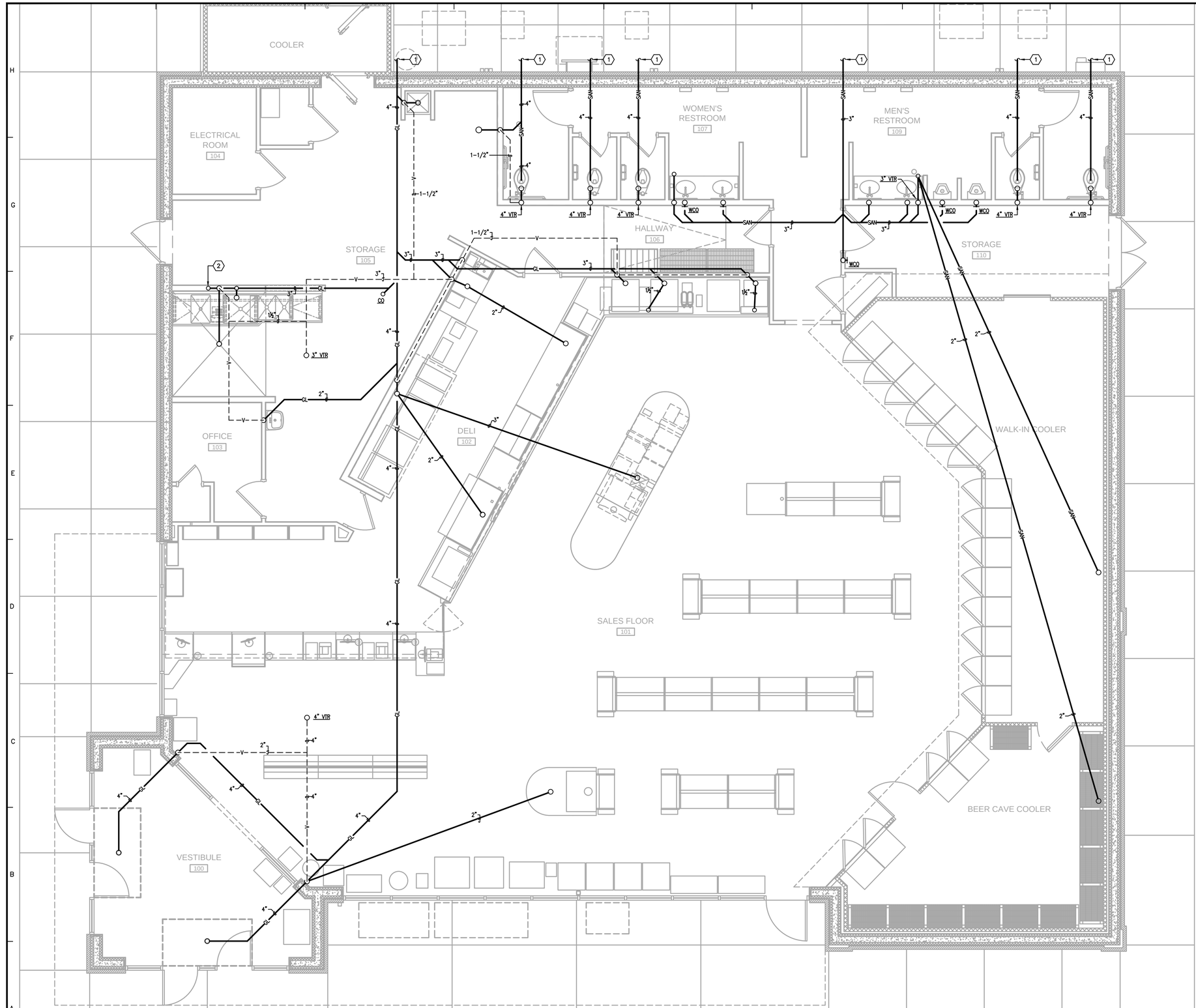

FLOOR PLAN - SANITARY WASTE AND VENT

SCALE: 1/4"=1'-0"

1 / P2.01A

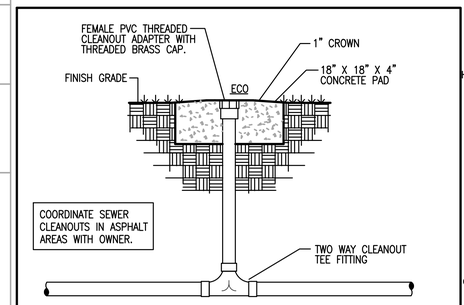

2-WAY EXTERIOR CLEANOUT DETAIL

NOT TO SCALE

PLUMBING TAG NOTES: (#)

1. REFER TO SHEET P2.01B FOR CONTINUATION.
2. PROVIDE P-TRAP WITH HUB FOR MAINTENANCE PURPOSES.

PLUMBING GENERAL NOTES:

A. PLUMBING CONTRACTOR SHALL PROVIDE AS-BUILT DRAWINGS WITH DIMENSIONED LOCATIONS OF SANITARY, WATER AND GAS LINES. REFERENCE GENERAL NOTE "A" FOR PHOTOGRAPHING REQUIREMENTS. LOCATION, DIRECTION AND CORRESPONDING NUMBER OF EACH PHOTOGRAPH SHALL BE INDICATED ON THE AS-BUILT DRAWINGS.

B. THE OWNER SHALL CHECK WALLS FOR LOCATIONS OF ALL PLUMBING LINES PRIOR TO DRYWALL BEING INSTALLED.

C. PLUMBING CONTRACTOR SHALL CAULK OR FOAM ALL WALL/CEILING PENETRATIONS MADE AS A RESULT OF PLUMBING PIPING INSTALLATION PRIOR TO INSULATION BEING INSTALLED TO IMPROVE THE VAPOR BARRIER. COORDINATE THIS WORK WITH THE GENERAL CONTRACTOR.

D. THE FOUR COMPARTMENT SINK LIP SHALL BE SET AT 39" ABOVE FINISH FLOOR.

E. ALL TRENCHES UNDER PAVEMENT SHALL BE FILLED WITH STONE.

F. ALL TOILET FLANGES SHALL BE CAST IRON OR STAINLESS STEEL.

G. ALL INTERIOR AND EXTERIOR DOMESTIC WATER PIPING SHALL BE CROSS-LINKED POLYETHYLENE (PEX OR EQUAL).

H. ALL INTERIOR DOMESTIC WATER LINES SHALL BE ¾" MINIMUM. WATER LINES SERVING FLUSH VALVES SHALL BE 1¼".

I. ALL DOMESTIC WATER LINES ENTERING AND EXITING THE BUILDING BELOW GRADE SHALL BE INSTALLED IN A SLEEVE FROM THE POINT WHERE THEY PENETRATE THE FLOOR TO BEYOND THE BLACK CONCRETE OR THE EQUIPMENT PAD, DEPENDING ON WHAT DIRECTION THEY EXIT THE BUILDING. THE SLEEVE SHALL BE AT LEAST 4" IN DIAMETER AND SHALL HAVE SWEEPING FITTINGS AT ANY BEND.

J. ALL WATER LINES SHALL BE SPACED 2" APART WHERE THEY PENETRATE THE FLOOR SLAB FOR EASE OF FUTURE MAINTENANCE.

K. ALL SHUT-OFF VALVES ON DOMESTIC WATER LINES SHALL BE TAGGED WITH 3½"x1½" ENGRAVED LAMINATED OR BRASS TAGS.

L. PLUMBING CONTRACTOR SHALL FURNISH AND INSTALL A FIVE POUND ANODE ON ALL FREEZE PROOF WATER HYDRANTS. GENERAL CONTRACTOR SHALL PROVIDE THE OWNER WITH PHOTOGRAPHS OF ALL ANODES TO VERIFY INSTALLATION.

M. GAS AND WATER UTILITY ENTRANCES INTO THE BUILDING SHALL BE SLEEVED TO OUTSIDE THE CONCRETE PADS.

N. PRIOR TO TOILETS BEING SET, THE PLUMBING CONTRACTOR SHALL VERIFY FLATNESS OF THE FLOOR WITH THE GENERAL CONTRACTOR TO ENSURE EACH TOILET WILL BE IN COMPLETE CONTACT WITH THE FLOOR AND NO SHIMS WILL BE REQUIRED.

O. EXTERIOR SEWER CLEANOUTS SHALL BE PLACED WHERE INDICATED ON THE PLANS AND/OR A MAXIMUM OF 95'-0" APART.

P. ALL OUTSIDE CLEANOUTS SHALL BE BRASS.

Q. ALL SANITARY AND GREASE WASTE PIPING SHALL BE SCHEDULE 40 PVC.

CMW The Shape of Ideas
Architecture
Civil Engineering
Landscape Architecture
a: 249 East Main Street
Suite 100
Lexington, Kentucky 40507
o: (859) 254-6623
w: www.cmwaec.com

CMTA
10411 Meeting Street, Prospect, Kentucky 40059
502.335.3885 1.502.326.2991 www.cmta.com

STATE OF KENTUCKY REGISTERED PROFESSIONAL ENGINEER DONALD R. MCCLURE 14283 LICENSED

FLOOR PLAN - SANITARY WASTE AND VENT

FiveStar #4460 Hopkinsville
NEWCOMB OIL CO., LLC
3070 PEMBROKE RD.
HOPKINSVILLE, KY 42240

CONSTRUCTION DOCUMENTS

Issue Date:	May, 29 2024
Drawn By:	WTD
Checked By:	DRH
Revisions:	

Mark	Date

AHJ SEAL

Project Number
24010.01

P-2.01A

PLOT DATE: Friday, June 21, 2024 5:16:24 PM

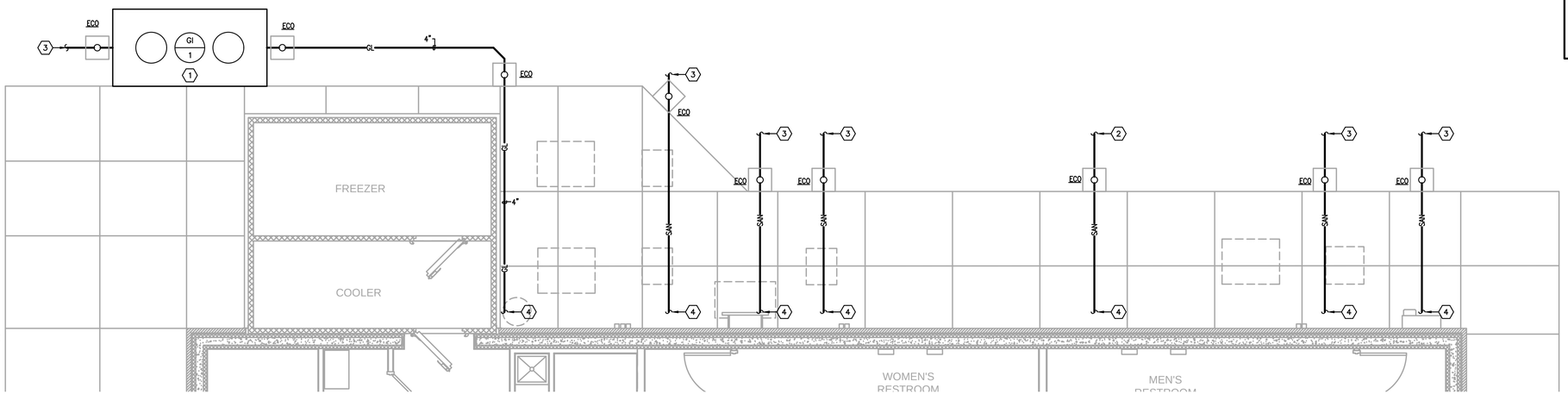

FLOOR PLAN - SANITARY WASTE AND VENT

SCALE: 1/4"=1'-0"

1 / P2.01B

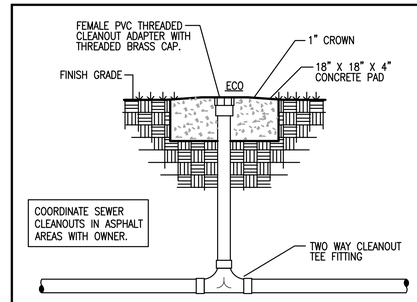

2-WAY EXTERIOR CLEANOUT DETAIL

NOT TO SCALE

PLUMBING TAG NOTES: (#)

1. FURNISH AND INSTALL A 1000 GALLON PRECAST CONCRETE GREASE TRAP. EXACT LOCATION SHALL BE SITE SPECIFIC AND DETERMINED BY OWNER.
2. 3" SANITARY OUT TO SITE 5'-0". REFERENCE CIVIL DRAWINGS FOR CONTINUATION. COORDINATE EXACT LAYOUT OF EXTERIOR SANITARY WITH OWNER AND SITE PLAN PRIOR TO ROUGH-IN.
3. 4" SANITARY OUT TO SITE 5'-0". REFERENCE CIVIL DRAWINGS FOR CONTINUATION. COORDINATE EXACT LAYOUT OF EXTERIOR SANITARY WITH OWNER AND SITE PLAN PRIOR TO ROUGH-IN.
4. REFER TO SHEET P2.01A FOR CONTINUATION.

PLUMBING GENERAL NOTES:

A. PLUMBING CONTRACTOR SHALL PROVIDE AS-BUILT DRAWINGS WITH DIMENSIONED LOCATIONS OF SANITARY, WATER AND GAS LINES. REFERENCE GENERAL NOTE "A" FOR PHOTOGRAPHING REQUIREMENTS. LOCATION, DIRECTION AND CORRESPONDING NUMBER OF EACH PHOTOGRAPH SHALL BE INDICATED ON THE AS-BUILT DRAWINGS.

B. THE OWNER SHALL CHECK WALLS FOR LOCATIONS OF ALL PLUMBING LINES PRIOR TO DRYWALL BEING INSTALLED.

C. PLUMBING CONTRACTOR SHALL CAULK OR FOAM ALL WALL/CEILING PENETRATIONS MADE AS A RESULT OF PLUMBING PIPING INSTALLATION PRIOR TO INSULATION BEING INSTALLED TO IMPROVE THE VAPOR BARRIER. COORDINATE THIS WORK WITH THE GENERAL CONTRACTOR.

D. THE FOUR COMPARTMENT SINK LIP SHALL BE SET AT 39" ABOVE FINISH FLOOR.

E. ALL TRENCHES UNDER PAVEMENT SHALL BE FILLED WITH STONE.

F. ALL TOILET FLANGES SHALL BE CAST IRON OR STAINLESS STEEL.

G. ALL INTERIOR AND EXTERIOR DOMESTIC WATER PIPING SHALL BE CROSS-LINKED POLYETHYLENE (PEX OR EQUAL).

H. ALL INTERIOR DOMESTIC WATER LINES SHALL BE ¾" MINIMUM. WATER LINES SERVING FLUSH VALVES SHALL BE 1¼".

I. ALL DOMESTIC WATER LINES ENTERING AND EXITING THE BUILDING BELOW GRADE SHALL BE INSTALLED IN A SLEEVE FROM THE POINT WHERE THEY PENETRATE THE FLOOR TO BEYOND THE BLACK CONCRETE OR THE EQUIPMENT PAD, DEPENDING ON WHAT DIRECTION THEY EXIT THE BUILDING. THE SLEEVE SHALL BE AT LEAST 4" IN DIAMETER AND SHALL HAVE SWEEPING FITTINGS AT ANY BEND.

J. ALL WATER LINES SHALL BE SPACED 2" APART WHERE THEY PENETRATE THE FLOOR SLAB FOR EASE OF FUTURE MAINTENANCE.

K. ALL SHUT-OFF VALVES ON DOMESTIC WATER LINES SHALL BE TAGGED WITH 3½"x1½" ENGRAVED LAMINATED OR BRASS TAGS.

L. PLUMBING CONTRACTOR SHALL FURNISH AND INSTALL A FIVE POUND ANODE ON ALL FREEZE PROOF WATER HYDRANTS. GENERAL CONTRACTOR SHALL PROVIDE THE OWNER WITH PHOTOGRAPHS OF ALL ANODES TO VERIFY INSTALLATION.

M. GAS AND WATER UTILITY ENTRANCES INTO THE BUILDING SHALL BE SLEEVED TO OUTSIDE THE CONCRETE PADS.

N. PRIOR TO TOILETS BEING SET, THE PLUMBING CONTRACTOR SHALL VERIFY FLATNESS OF THE FLOOR WITH THE GENERAL CONTRACTOR TO ENSURE EACH TOILET WILL BE IN COMPLETE CONTACT WITH THE FLOOR AND NO SHIMS WILL BE REQUIRED.

O. EXTERIOR SEWER CLEANOUTS SHALL BE PLACED WHERE INDICATED ON THE PLANS AND/OR A MAXIMUM OF 95'-0" APART.

P. ALL OUTSIDE CLEANOUTS SHALL BE BRASS.

Q. ALL SANITARY AND GREASE WASTE PIPING SHALL BE SCHEDULE 40 PVC.

CMW The Shape of Ideas
Architecture
Civil Engineering
Landscape Architecture
a: 249 East Main Street
Suite 100
Lexington, Kentucky 40507
o: (859) 254-6623
w: www.cmwaec.com

CMTA
10411 Meeting Street, Prospect, Kentucky 40059
502.326.3585 1.502.326.2991 www.cmta.com

STATE OF KENTUCKY DAVID RYAN HOWARD LICENSED PROFESSIONAL ENGINEER 24623

FLOOR PLAN - SANITARY WASTE AND VENT

FiveStar #4460 Hopkinsville
NEWCOMB OIL CO., LLC
3070 PEMBROKE RD.
HOPKINSVILLE, KY 42240

CONSTRUCTION DOCUMENTS

Issue Date:	May, 29 2024
Drawn By:	WTD
Checked By:	DRH
Revisions:	

Mark	Date

AHJ SEAL

Project Number
24010.01

P-2.01B

PLOT DATE: Friday, June 21, 2024 9:16:20 PM

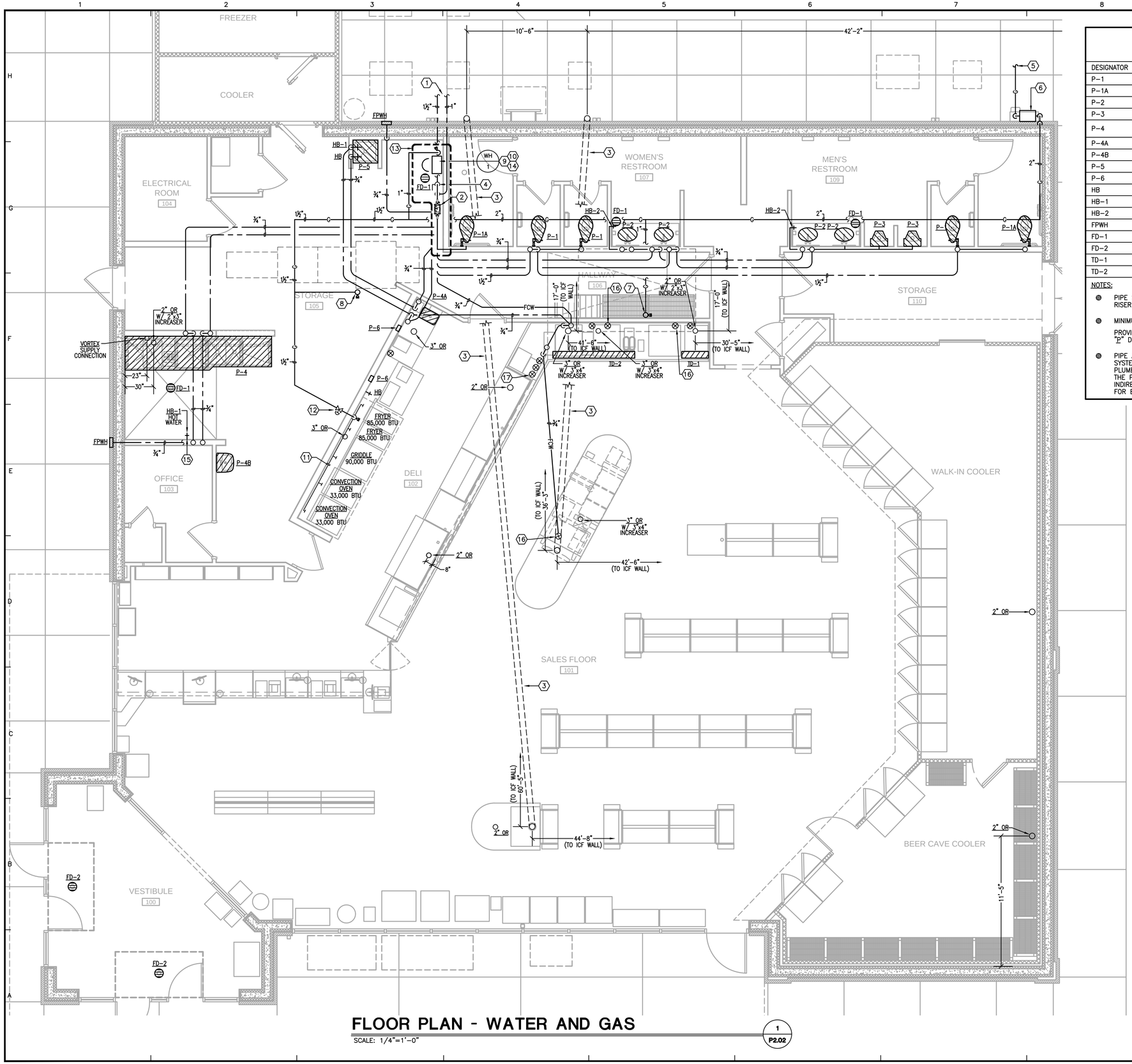

FLOOR PLAN - WATER AND GAS

SCALE: 1/4"=1'-0"

1 / P2.02

PLUMBING FIXTURE SCHEDULE

DESIGNATOR	FIXTURE	CW	HW	SAN	VENT
P-1	WATER CLOSET – FLOOR SET – FLUSH VALVE	1¼"	--	4"	2"
P-1A	WATER CLOSET – FLOOR SET – FLUSH VALVE – ADA	1¼"	--	4"	4"
P-2	LAVATORY – INTEGRAL TO COUNTERTOP	½"	½"	1½"	1½"
P-3	URINAL – ADA	¾"	--	2"	1½"
P-4	VORTEX WASH SYSTEM	(2) ¾", (1) ½"	(2) ¾", (1) ½"	2"	1½"
P-4A	ONE COMPARTMENT HAND SINK INTEGRAL TO COUNTERTOP	½"	½"	1½"	1½"
P-4B	WALL-HUNG HAND SINK	½"	½"	1½"	1½"
P-5	RECESSED MOP BASIN – 24"x24"	--	--	3"	1½"
P-6	ICE MAKER CONNECTION BOX	½"	--	--	--
HB	COLD WATER HOSE BIBB	¾"	--	--	--
HB-1	HOT WATER HOSE BIBB	--	¾"	--	--
HB-2	CONCEALED COLD WATER HOSE BIBB	¾"	--	--	--
FPWH	FREEZE-PROOF WALL HYDRANT	¾"	--	--	--
FD-1	SQUARE TOP FLOOR DRAIN – 3" OUTLET	--	--	3"	1½"
FD-2	SQUARE TOP FLOOR DRAIN – 4" OUTLET	--	--	4"	2"
TD-1	TROUGH DRAIN – 24" LONG	--	--	1½"	1½"
TD-2	TROUGH DRAIN – 96" LONG	--	--	1½"	1½"

NOTES:

- PIPE SIZES ARE AS INDICATED UNLESS OTHERWISE NOTED ON FLOOR PLANS AND RISER DIAGRAMS.
- MINIMUM 2" SANITARY PIPING UNDERGROUND.
  PROVIDE ALL REQUIRED PIPING TO FIXTURES INDICATED ON THE FLOOR PLANS, INDICATED WITH A "P" DESIGNATION. PROVIDE PIPING OF SIZE INDICATED IN THIS SCHEDULE.
- PIPE ALL EQUIPMENT (SUPPLIED BY OTHERS) AS REQUIRED TO OBTAIN A FULL AND OPERATIONAL SYSTEM PROVIDE BACKFLOW PROTECTION AS/IF REQUIRED BY THE DETAILS AND BY THE STATE PLUMBING CODE ALL EQUIPMENT SHALL BE CONNECTED PER THE MANUFACTURER'S REQUIREMENTS. THE PLUMBING CONTRACTOR SHALL ALSO INSTALL ANY DRAIN PIPING CONNECTIONS AND SPILL INDIRECTLY TO EITHER AN OPEN RECEPTACLE OR FLOOR DRAIN. REFER TO ARCHITECTURAL PLANS FOR EXACT PLACEMENT OF ALL EQUIPMENT.

PLUMBING TAG NOTES: (#)

1. (1) 1½" AND (1) 1" DOMESTIC WATER LINES OUT TO SITE. REFERENCE CIVIL DRAWINGS FOR CONTINUATION. WATER LINES MUST BE CONTINUOUS WITH NO JOINTS ALL THE WAY TO THE METER.
2. FURNISH AND INSTALL 1½" WILKINS MODEL 375 BACKFLOW PREVENTER WITH AIR GAP AND STRAINER. REFERENCE THE DOMESTIC WATER ENTRY PIPING SCHEMATIC ON DRAWING P1.01 FOR ADDITIONAL INFORMATION.
3. FURNISH AND INSTALL 6" PVC SLEEVE BELOW SLAB WITH (2) 45° ELBOWS ON EACH END.
4. (1) 1½" AND (1) 1" DOMESTIC WATER LINES UP FROM BELOW SLAB. REFERENCE DOMESTIC WATER ENTRY SCHEMATIC ON DRAWING P1.01 FOR ADDITIONAL INFORMATION.
5. NATURAL GAS SERVICE OUT TO SITE. COORDINATE PIPE MATERIAL, SIZE AND GAS PRESSURE WITH LOCAL UTILITY COMPANY.
6. FURNISH AND INSTALL NEW NATURAL GAS METER PER LOCAL UTILITY COMPANY REQUIREMENTS.
7. EXTEND 1" GAS TO COOLING UNIT ON ROOF AND CONNECT. FURNISH AND INSTALL GAS SHUT-OFF VALVE AND 6" DIRT LEG.
8. EXTEND ¾" GAS TO MAKE-UP AIR UNIT ON ROOF AND CONNECT. FURNISH AND INSTALL 6" DIRT LEG AND GAS SOLENOID VALVE. INTERCONNECT GAS SOLENOID VALVE TO HOOD FIRE SUPPRESSION SYSTEM. COORDINATE THIS WORK WITH THE ELECTRICAL CONTRACTOR.
9. EXTEND 1" GAS TO WATER HEATER AND CONNECT. FURNISH AND INSTALL GAS SHUT-OFF VALVE AND 6" DIRT LEG.
10. WH-1 – FURNISH AND INSTALL A RINNAI MODEL RL75i(VC2528FFUD-US), TANKLESS GAS FIRED WATER HEATER WITH MINIMUM INPUT OF 10,300 BTUH AND A MAXIMUM INPUT OF 180,000 BTUH.
11. ROUTE 1½" GAS HEADER LOW ON WALL BEHIND COOKING EQUIPMENT. FURNISH AND INSTALL GAS QUICK CONNECT AND GAS SHUT-OFF VALVE AT EACH PIECE OF EQUIPMENT AND PROVIDE (1) ¾" QUICK CONNECT AND GAS SHUT-OFF VALVE FOR FUTURE CONNECTION.
12. FURNISH AND INSTALL GAS SOLENOID VALVE. INTERCONNECT WITH HOOD FIRE SUPPRESSION SYSTEM.
13. PROVIDE BRASS TAG LABELS AND SHUTOFF VALVES IN THIS AREA FOR WATER PIPING AT EACH WALL OR FLOOR PENETRATION.
14. APPROXIMATE LOCATION OF PRESSURE ASSIST PUMP. REFERENCE DOMESTIC WATER ENTRY PIPING SCHEMATIC ON DRAWING P1.01 FOR ADDITIONAL INFORMATION.
15. HOSE BIBB SHALL BE MOUNTED 18" ABOVE FINISH FLOOR AND 7'-6" OFF OF THE ICF WALL.
16. FURNISH AND INSTALL A ZURN MODEL QCM43-6QX COPPER MANIFOLD AT EACH GROUP OF SHUT-OFF VALVES LOCATED WITHIN CABINET SPACE. (TYPICAL)
17. STUB UP WATER UNDER CABINET BESIDE THE DRAIN (TYPICAL).

NEW GAS METER LOAD:

HVAC AIR HANDLING UNIT –	320,000 BTUH
DOMESTIC WATER HEATER –	180,000 BTUH
MAKE-UP AIR UNIT –	145,800 BTUH
KITCHEN EQUIPMENT –	326,000 BTUH
TOTAL CONNECTED LOAD –	971,800 BTUH

CMW The Shape of Ideas
Architecture
Civil Engineering
Landscape Architecture
a: 249 East Main Street
Suite 100
Lexington, Kentucky 40507
o: (859) 254-6623
w: www.cmwaec.com

CMTA
10411 Meeting Street, Prospect, Kentucky 40059
502.326.3585 1.502.326.2991 www.cmta.com

STATE OF KENTUCKY – REGISTERED PROFESSIONAL ENGINEER – ROBERT W. TAYLOR – 24321 – LICENSED

FLOOR PLAN - WATER AND GAS

FiveStar #4460 Hopkinsville
NEWCOMB OIL CO., LLC
3070 PEMBROKE RD.
HOPKINSVILLE, KY 42240

CONSTRUCTION DOCUMENTS

Issue Date:	May, 29 2024
Drawn By:	WTD
Checked By:	DRH
Revisions:	

Mark	Date

AHJ SEAL

Project Number
24010.01

P-2.02

PLOT DATE: Friday, June 21, 2024 9:16:39 PM

EXHAUST FAN

SYMBOL	EF-2	EF-3	EF-4
MANUFACTURER	COOK	COOK	COOK
MODEL	GCVF-500	GCVF-500	GCVF-500
CFM	300	225	300
S.P.	0.3"	0.3"	0.3"
FAN RPM	1,368	1,176	1,368
SONES	5	3	5
VOLTAGE	115/1/60	115/1/60	115/1/60
MOTOR HP	0.167	0.167	0.167
WATTS	53	29	53
REMARKS	1-5	1-5	1-6

REMARKS:

1. UNIT TO BE SUPPLIED WITH AN ALUMINUM EXTERIOR WALL CAP WITH BIRDSCREEN AND BACKDRAFT DAMPER.
2. UNIT TO BE PROVIDED WITH SPEED CONTROLLER.
3. THE EXHAUST FAN SHALL BE UL LISTED.
4. PROVIDE WITH VIBRATION ISOLATION HANGING/SUPPORT KIT (NEOPRENE).
5. PROVIDE WITH WHITE, ALUMINUM EXHAUST GRILLE.
6. PROVIDE WITH REMOTE THERMOSTAT AND TEMPERATURE CONTROLLER. FAN IS TO OPERATE TO MAINTAIN ROOM SETPOINT OF 80 DEG (ADJ.).

AIR BARRIER SCHEDULE

DRAWING TAG	AB-1	AB-2
MANUF. & MODEL	BERNER CHD10-1042A	BERNER CHD10-2072A
MOUNTING TYPE	ABOVE DOOR	ABOVE DOOR
NOMINAL AIRFLOW (CFM)	1,784	3,608
MOTOR CONNECTION	208 / 1ø / 60	208 / 1ø / 60
HEATER CONNECTION	N/A	N/A
MOTOR AMPERAGE	3.5	7.0
FAN SIZE / COUNT	1/2 HP / (1)	1/2 HP / (2)
SOUND POWER (dBA)	66	69
REMARKS	1,2,3,4,5,6,7	1,2,3,4,5,6,7

REMARKS:

1. PROVIDE WITH NEMA 1 ROLLER DOOR SWITCH.
2. COORDINATE UNIT COLOR WITH OWNER.
3. PROVIDE WITH NON-FUSIBLE DISCONNECT IN ACCESSIBLE LOCATION.
4. FURNISHED AND INSTALLED BY MECHANICAL CONTRACTOR. INSTALL PER MANUFACTURER'S RECOMMENDATIONS.
5. PROVIDE UNIT WITH MOUNTING ACCESSORIES AS NECESSARY.
6. PROVIDE UNIT WITH 5 YEAR WARRANTY.
7. UNIT IS TO HAVE A SINGLE POINT CONNECTION.

RANGE HOOD

SYMBOL	RH-1
MANUFACTURER	CAPTIVEAIRE
MODEL	4224EX-2-B
SERVICE	DELI AREA
PHYSICAL SIZE	150"L X 42"D
INTEGRAL FIRE SUPPRESSION	NO
MOUNTING HEIGHT	6'-8" AFF
TYPE	TYPE 1
EXHAUST FAN	
MARK	EF-1
MANUFACTURER AND MODEL #	CAPTIVEAIRE - DU180HFA
EXHAUST CFM/ESP	2,500 / 1.0"
ELECTRICAL (V/ø/HZ)	208 / 3 / 60
FAN HP/RPM	1.5 HP / 1,079
FLA	6.6
WEATHER PROOF DISCONNECT	YES
GREASE DRAIN	YES

REMARKS:

1. RANGE HOOD IS OWNER FURNISHED, OWNER INSTALLED.
2. PROVIDE THE HOOD IN ONE SECTION. ATTACH UNIT TO WALL WITH MANUFACTURER'S WALL BRACKET. COORDINATE MOUNTING LOCATION WITH THE ARCHITECT.
3. ALL COMPONENTS OF THE RANGE HOOD SHALL BE UL LISTED.
4. UNIT TO BE PROVIDED WITH ELECTRIC RELAY SWITCH BOX FOR ELECTRIC RANGE. COORDINATE INSTALLATION WITH THE ELECTRICAL CONTRACTOR.
5. PROVIDE EXHAUST FAN WITH GREASE BOX, GREASE CUP, AND MANUFACTURER'S ROOF CURB.
6. PROVIDE HOOD WITH LED LIGHT FIXTURES.
7. INFORMATION IS PROVIDED FOR COORDINATION PURPOSES.
8. FAN IS TO BE UL LISTED FOR KITCHEN USE AND GREASE LADEN VAPORS.
9. PROVIDE HOOD WITH 24" FIELD WRAPPER.
10. FAN AND LIGHT CONTROLS ARE TO BE MOUNTED ON FRONT OF HOOD. EACH SWITCH SHALL HAVE AN INDICATOR LIGHT AND IDENTIFICATION PLACARD. COORDINATE EXACT LOCATION WITH OWNER.
11. THE FIRE SUPPRESSION SYSTEM SHALL BE THE PRE-ENGINEERED TYPE WITH A FIXED NOZZLE AGENT DISTRIBUTION NETWORK. IT SHALL BE UL LISTED AND INSTALLED PER MANUFACTURER'S RECOMMENDATIONS.
12. THE SYSTEM SHALL BE CAPABLE OF AUTOMATIC DETECTION AND ACTUATION WITH LOCAL OR REMOTE MANUAL ACTUATION. ACCESSORIES SHALL BE AVAILABLE FOR MECHANICAL OR ELECTRICAL GAS LINE SHUT-OFF APPLICATIONS.
13. THE EXTINGUISHING AGENT SHALL BE A POTASSIUM CARBONATE, POTASSIUM ACETATE-BASED FORMULATION DESIGNED FOR FLAME KNOCKDOWN AND SECUREMENT OF GREASE RELATED FIRES. IT SHALL BE AVAILABLE IN PLASTICS CONTAINERS WITH INSTRUCTIONS FOR LIQUID AGENT HANDLING AND USAGE.
14. THE REGULATED RELEASE MECHANISM SHALL BE COMPATIBLE WITH A FUSIBLE LINK DETECTION SYSTEM. THE FUSIBLE LINK SHALL BE SELECTED AND INSTALLED ACCORDING TO THE OPERATING TEMPERATURE IN THE VENTILATING SYSTEM. THE FUSIBLE LINK SHALL BE SUPPORTED BY A DETECTOR BRACKET/LINKAGE ASSEMBLY.
15. BALANCING CONTRACTOR TO BALANCE EXHAUST FAN TO WITHIN 5% OF LISTED AIRFLOW.

MAKE-UP AIR UNIT

GENERAL INFORMATION	
SYMBOL	MAU-1
MANUFACTURER	CAPTIVEAIRE
MODEL	A2-D.250-20D-MPU
CFM / ESP	2,125 / 0.45"
HP / RPM	1 HP / 1,031
V/ø/HZ	208 / 3 / 60
FLA	3.8
INPUT (GAS)	145.8 MBH
TEMP. RISE	60° F
WEIGHT	1,600 LBS
CONDENSING UNIT INFORMATION	
V/ø/HZ	208 / 1 / 60
MCA / MOP	27.5 / 40
TOTAL / SENSIBLE CAPACITY (MBH)	49.4 / 31.6
ENTERING AIR DB / WB	91.0° F / 75.0° F
LEAVING AIR DB / WB	76.7° F / 68.7° F

REMARKS:

1. ALL COMPONENTS OF THE MAKEUP AIR UNIT SHALL BE UL LISTED.
2. PROVIDE UNIT WITH COOLING INTERLOCK RELAY.
3. PROVIDE WITH LOW-FIRE START.
4. THIS UNIT HAS TWO POWER CONNECTIONS.
5. PROVIDE WITH DX COOLING INTAKE AIR THERMOSTAT AND RELAYS MOUNTED IN UNIT.
6. PROVIDE MAKEUP AIR UNIT WITH FACTORY MOUNTED AND WIRED CONTROL PANEL. PANEL SHALL CONTAIN (1) POWER DISCONNECT SWITCH AND (1) STARTER FOR SUPPLY FAN AND (1) STARTER FOR THE EXHAUST FAN. PANEL SHALL BE PRE-WIRED IN A NEMA OUTDOOR ENCLOSURE WITH STAINLESS STEEL HINGED AND LOCKABLE COVER.
7. PROVIDE A FULL PERIMETER ROOF CURB FOR MAKE-UP AIR UNIT.
8. PROVIDE WITH MOTORIZED BACKDRAFT DAMPER IN INTAKE OF UNIT INTERLOCKED TO OPEN WITH SUPPLY FAN. DAMPER SHALL HAVE SEALS.
9. PROVIDE A REMOTE RANGEHOOD CONTROL PANEL WHERE INDICATED ON THE NEW WORK DRAWINGS. PANEL SHALL HAVE TWO (2) SWITCHES; (1) ACTIVATE SUPPLY AND EXHAUST FAN, (2) ACTIVATE HOOD LIGHTS, EACH SWITCH SHALL HAVE AN INDICATOR LIGHT AND IDENTIFICATION PLACARD.
10. PROVIDE WITH MODULATING GAS VALVE.
11. BALANCING CONTRACTOR TO BALANCE MAU TO WITHIN 5% OF LISTED AIRFLOW.

PACKAGED COOLING UNIT

SYMBOL	PCU-1	PCU-2
AREA SERVED	GENERAL	SALES FLOOR
TYPE OF SYSTEM	DX COOLING / GAS HEAT	DX COOLING ONLY
MANF. & MODEL	TRANE YSJ180	TRANE TSC060G3
CONFIGURATION	VERTICAL	VERTICAL
SINGLE POINT CONNECTION	YES	YES
VOLTAGE / PHASE	208 / 3ø	208 / 3ø
MCA / MOP	78.0 / 100.0	29.0 / 40.0
REMARKS (SEE NOTES BELOW)	1-17	1,2,3,4,6,8,11,12,13,15
SUPPLY FAN		
DESIGN CFM/RPM	6,000 / 1,234	2000 / 924
MIN. OUTSIDE AIR (CFM)	1,000	0
HP / BHP	3.0 / 2.46	1.0 / 0.58
VOLTS / PHASE / HZ	208 / 3 / 60	208 / 3 / 60
ESP	1.0"	0.47"
TSP	1.29"	-
DX COIL		
NET TOTAL COOLING CAP. (MBH)	169.7	58.5
NET SENSIBLE COOLING CAP. (MBH)	140.1	52.0
TOTAL CFM	6,000	2000
FACE VELOCITY (FPM)	240	245
NUMBER OF COMPRESSORS	2	1
EAT - SUMMER (DB/WB)	76.0 F / 63.0 F	75.0 F / 61.0 F
LAT - SUMMER (DB/WB)	55.1 F / 53.4 F	55.6 F / 53.6 F
EER @ AHRI	10.8	12.0
HOT GAS REHEAT CAPACITY		
CAPACITY (MBH)	153.3	N/A
LAT (DB)	78.1 F	N/A
COIL MOISTURE REMOVAL (GAL/HR)	7.2	N/A
GAS HEATING		
FUEL	NATURAL GAS	N/A
INPUT / OUTPUT HEATING CAP. (MBH)	320.0 / 259.2	N/A
EAT - WINTER (DB/WB)	57.0 F	N/A
LAT - WINTER (DB/WB)	97.0 F	N/A
DISPOSABLE PRIMARY FILTER		
TYPE	THROWAWAY	THROWAWAY
EFFICIENCY	MERV 8 PLEATED	MERV 8 PLEATED
SIZE (W" x H" x D")	20x25x2	20x35x2

REMARKS:

1. PROVIDE FLEXIBLE CONNECTIONS FOR ALL DUCTWORK AND PIPING CONNECTIONS TO UNIT.
2. SLOPE CONDENSATE DRAIN TO OUTLET.
3. PROVIDE WITH HIGH EFFICIENCY FAN MOTORS.
4. PROVIDE UNIT WITH A SINGLE POINT CONNECTION, FACTORY INSTALLED STARTER. UNIT IS TO BE EQUIPPED WITH THROUGH-THE-BASE ELECTRICAL WITH FACTORY DISCONNECT SWITCH OPTION.
5. PROVIDE WITH HONEYWELL MODEL TH8321R1001 REDLINK PROGRAMMABLE THERMOSTAT,
   HONEYWELL MODEL C7189R1004 REDLINK REMOTE TEMPERATURE SENSORS, AND HONEYWELL MODEL THM6000R1002 REDLINK INTERNET GATEWAY.
6. PROVIDE UNIT WITH HAIL GUARD.
7. PROVIDE WITH A 120V SERVICE OUTLET.
8. PROVIDE WITH 14" INSULATED, FULL PERIMETER CURB.
9. MOTORIZED OUTSIDE AIR DAMPER. (BALANCE MINIMUM OA TO 575 CFM.)
10. PROVIDE UNIT WITH ENTHALPY ECONOMIZER AND ECONOMIZER HOOD.
11. PROVIDE UNIT WITH HINGED ACCESS DOORS FOR FILTER RACK.
12. BALANCE REPORT SHALL BE TURNED OVER TO GENERAL CONTRACTOR.
13. UNIT MANUFACTURER SHALL BE TRANE, NO EXCEPTIONS.
14. PROVIDE UNIT WITH BAROMETRIC RELIEF HOOD.
15. PROVIDE UNIT WITH FACTORY MOUNTED RETURN AIR SMOKE DETECTOR.
16. PROVIDE UNIT WITH HOT GAS REHEAT FOR DEHUMIDIFICATION MODE AND DUCT-MOUNTED HUMIDISTAT SET AT 50% RELATIVE HUMIDITY.
17. PROVIDE UNIT WITH MULTI-SPEED SUPPLY FAN STAGED WITH COMPRESSORS.

MECHANICAL LEGEND

AFF	ABOVE FINISHED FLOOR
TYP	TYPICAL
NTS	NOT TO SCALE
NIC	NOT IN CONTRACT
NO	NORMALLY OPEN
NC	NORMALLY CLOSED
⬡	TAGGED NOTE
⬭	INDICATES AIR DISTRIBUTION DEVICE SPECIFICATION (L=LOUVER, T=TRANSFER GRILLE, S=SUPPLY DIFFSER OR REGISTER, R=RETURN GRILLE OR REGISTER, E= EXHAUST GRILLE OR REGISTER)
◯	MECHANICAL EQUIPMENT DESIGNATOR
20X12 SA	SUPPLY AIR DUCT - INSIDE DIMENSION (TURNED UP/DOWN)
20X12 RA	RETURN AIR DUCT - INSIDE DIMENSION (TURNED UP/DOWN)
20X12 EA	EXHAUST/RELIEF AIR DUCT - INSIDE DIMENSION (TURNED UP/DOWN)
	FLEXIBLE DUCT
AD	ACCESS DOOR IN BOTTOM OF DUCT
AD	ACCESS DOOR IN SIDE OF DUCT
M	OPPOSED BLADE DAMPER (MOTORIZED)
	VOLUME DAMPER (MANUAL)
	TURNING VANES
T_S	TEMPERATURE SENSOR
T	REMOTE TEMPERATURE SETPOINT CONTROLLER
DS	DUCT SMOKE DETECTOR

REGISTERS, GRILLES, AND DIFFUSERS

SYMBOL	MANUF. & MODEL	MATERIAL & TYPE	CFM RANGE	PHYSICAL SIZE: OVERALL FACE SIZE	PHYSICAL SIZE: NECK SIZE	PHYSICAL SIZE: INLET DUCT SIZE	REMARKS
S-1	TITUS TMRA	STEEL CONSTRUCTION 4 CONE 360° UNIFORM PATTERN	0-130	20"ø	6"ø	6"ø	3
S-2	TITUS TMRA	STEEL CONSTRUCTION 4 CONE 360° UNIFORM PATTERN	131-250	22.5"ø	8"ø	8"ø	3
S-3	TITUS TMRA	STEEL CONSTRUCTION 4 CONE 360° UNIFORM PATTERN	251-375	22.5"ø	10"ø	10"ø	3
S-4	TITUS TMSA	STEEL CONSTRUCTION 3 CONE 360° PATTERN	0-100	12"x12"	6"ø	6"ø	1, 2, 3, 5, 7
S-5	TITUS 300RS	EXTRUDED ALUMINUM DOUBLE DEFLECTION 3/4" SPACING	0-450	14"x12"	12"x10"	12"x10"	3, 4
S-6	KRUEGER DPL	EXTRUDED ALUMINUM DRUM LOUVER ADJUSTABLE BLADES	0-670	22"x12"	20"x10"	20"x10"	3, 4
R-1	TITUS 350ZRL	STEEL LOUVERED GRILLE 3/4" BLADE SPACING 0° DEFLECTION	0-425	14"x12"	12x10"	12"x10"	3, 4
R-2	TITUS 23RL	STEEL RETURN GRILLE 45° DEFLECTION 3/4" BLADE SPACING	1575	48"x24"	46"x22"	46"x22"	3, 4
R-3	TITUS 23RL	STEEL RETURN GRILLE 45° DEFLECTION 3/4" BLADE SPACING	3000	48"x48"	46"x46"	46"x46"	3, 5, 6
R-4	TITUS 355RL	STEEL LOUVERED GRILLE 1/2" BLADE SPACING 35° DEFLECTION	0-100	12"x10"	10"x8"	10"x8"	3, 4
T-1	HART & COOLEY TG	ALUMINUM CONSTRUCTION "Y" TYPE BLADE VISION PROOF	0-100	12"x12"	10"x10"	10"x10"	3, 4

REMARKS

1. INLET TRANSITION BOX, ROUND TO RECTANGULAR.
2. PROVIDE WITH MOLDED INSULATION BLANKET ON DIFFUSER.
3. PROVIDE WHITE IN COLOR.
4. GRILLE SHALL BE SIDEWALL/DUCT MOUNTED.
5. CEILING SURFACE MOUNTED.
6. PROVIDE WITH PLENUM BOX. PAINT INTERIOR OF PLENUM BOX WITH FLAT BLACK PAINT.
7. PROVIDE DESIGNATED TYPE "B" DIFFUSERS WITH 3-WAY THROW.

Material Requirements to Achieve Installed R-Value

Nominal Thickness in.	(mm)	Installed Thickness in.	(mm)	Stretch Out Dimensions, in. (mm): Round and Oval Ducts		Square Ducts		Rectangular Ducts	
1½	(38)	1⅛	(29)	P+9½	(240)	P+8	(205)	P+7	(180)
2	(51)	1½	(38)	P+12	(305)	P+10	(255)	P+8	(205)
2½	(56)	1⅝	(41)	P+13	(330)	P+11	(280)	P+8½	(215)
3	(76)	2¼	(57)	P+17	(430)	P+14½	(370)	P+11½	(290)
4	(102)	3	(76)	P+22	(560)	P+19	(483)	P+16	(406)

P = measured duct perimeter

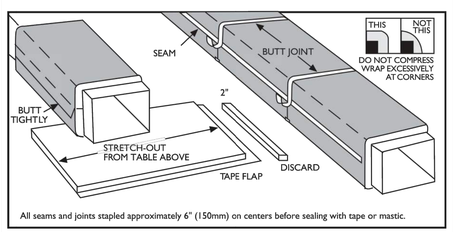

All seams and joints stapled approximately 6" (150mm) on centers before sealing with tape or mastic.

GENERAL NOTES (APPLICABLE TO ALL DRAWINGS)

A. EACH CONTRACTOR, SUPPLIER AND, OR MANUFACTURER SHALL REFER TO ALL DOCUMENTS PERTAINING TO THIS PROJECT AND COORDINATE ACCORDINGLY SO AS TO ENSURE ADEQUACY OF FIT, COMPLIANCE WITH SPECIFICATIONS, PROPER VOLTAGE AND CURRENT CHARACTERISTICS AND AVOID CONFLICT WITH ANY OTHER BUILDINGS SYSTEMS. VERIFY SAME WITH SHOP DRAWINGS.

B. ALL OFFSETS, TURNS, FITTINGS, TRIM, DETAIL, ETC., MAY NOT BE INDICATED, BUT SHALL BE PROVIDED AS REQUIRED. ADDITIONAL ALLOWANCES SHALL BE INCLUDED FOR SAME AT EACH PROPOSERS' DISCRETION.

C. OBSERVE ALL APPLICABLE CODES, RULES AND REGULATIONS (CITY, COUNTY, LOCAL, STATE, FEDERAL, MUNICIPALITY, UTILITY COMPANY, OSHA, ETC.).

D. ALL SYSTEMS, EQUIPMENT, AND MATERIALS ARE TO BE INSTALLED IN A NEAT AND WORKMANLIKE MANNER. WORK NOT DONE SO SHALL BE REMOVED AND REINSTALLED SATISFACTORILY.

E. WHERE MOUNTING HEIGHTS ARE NOT INDICATED OR ARE IN CONFLICT WITH ANY OTHER BUILDING SYSTEM, CONTACT THE ENGINEERS BEFORE INSTALLATION. REFER ALSO TO ARCHITECTURAL WALL INTERIOR AND EXTERIOR WALL ELEVATIONS, CEILING HEIGHTS AND OTHER DETAIL OF THESE DOCUMENTS.

F. DO NOT SCALE FROM DRAWINGS, PRINTING DISTORTS SCALE. WORK SHALL BE LAID OUT FROM DIMENSIONED DRAWINGS, OR DIMENSIONS SUPPLIED TO THE CONTRACTOR.

G. THE PURPOSE AND INTENT OF ALL THE DOCUMENTS PERTAINING TO THIS PROJECT IS TO PROVIDE A COMPLETE, FUNCTIONAL, SAFE, NEW FACILITY. ANYTHING LESS SHALL BE UNACCEPTABLE.

H. ANY VIBRATING, OSCILLATING, OR OTHER NOISE OR MOTION PRODUCING EQUIPMENT SHALL BE ISOLATED FROM SURROUNDING SYSTEMS IN AN APPROVED MANNER. NOISY OR STRUCTURALLY DAMAGING INSTALLATIONS SHALL BE SATISFACTORILY REPLACED OR REPAIRED AT THE INSTALLING CONTRACTOR'S EXPENSE. THE FINAL DECISION ON THE SUITABILITY OF A PARTICULAR INSTALLATION'S ACCEPTABILITY SHALL BE THAT OF THE ENGINEER.

I. INSTALL EQUIPMENT, MATERIALS, ETC. IN STRICT ACCORD WITH MANUFACTURER'S RECOMMENDATIONS AND DIRECTIONS. IF IN CONFLICT WITH THE DESIGN INDICATED IN CONTRACT DOCUMENTS, NOTIFY THE ENGINEERS PRIOR TO INSTALLATION FOR CLARIFICATION.

J. ALL SUPPORTS FOR EQUIPMENT, DEVICES OR FIXTURES SHALL BE UNIQUE, FROM THE BUILDING STRUCTURE. DO NOT SUPPORT WORK FROM OTHER TRADES, EQUIPMENT, OR SUPPORTS WITHOUT WRITTEN PERMISSION FROM THE ENGINEER AND CONSENT OF THE OTHER TRADE, IN WRITING.

K. DEVIATIONS IN SIZE, CAPACITIES, FIT, FINISH, ETC. FOR EQUIPMENT FROM THAT PRIME SPECIFIED SHALL BE THE RESPONSIBILITY OF THE PURCHASER OF THAT EQUIPMENT. ANY PROVISIONS REQUIRED TO ACCOMMODATE A DEVIATION, WHETHER APPROVED BY THE ENGINEERS OR NOT, SHALL BE THE RESPONSIBILITY OF THE PURCHASER.

L. THE GENERAL CONTRACTOR FOR THIS CONSTRUCTION IS RESPONSIBLE FOR THE COORDINATION, APPEARANCE, SCHEDULING, AND TIMELINESS OF THE WORK OF ALL TRADES, CONTRACTORS, SUPPLIERS, INSTALLERS, ETC.

M. VALVES, BALANCING DAMPERS, OR ANY MECHANICAL/ELECTRICAL ITEM SHALL NOT BE LOCATED ABOVE A HARD CEILING. IF THIS IS NOT POSSIBLE, THEN AN APPROPRIATELY SIZED ACCESS DOOR SHALL BE PLACED UNDER THE ITEM TO ALLOW EASY MAINTENANCE AND ADJUSTMENT.

N. THE GENERAL CONTRACTOR SHALL ENSURE PROPER COORDINATION BETWEEN ALL TRADES SUCH THAT CONDUITS, PIPING, DUCTWORK, ETC. DO NOT BLOCK ACCESS TO VALVES, EQUIPMENT, DUCT ACCESS DOORS, ETC. ITEMS THAT HAVE BEEN INSTALLED WHERE ACCESS IS COMPROMISED SHALL BE RELOCATED AT THE CONTRACTOR'S EXPENSE.

O. REFER TO DETAIL SHEETS FOR ADDITIONAL PIPING/DUCTWORK INSTALLATION REQUIREMENTS.

P. THE EQUIPMENT ROUGH-IN ITEMS AND THEIR DIMENSIONED LOCATIONS FOR ALL CONNECTIONS ARE ACCURATE TO THE BEST OF OUR KNOWLEDGE AND SHALL BE VERIFIED WITH THE EQUIPMENT SUPPLIER, OWNER AND/OR THE EQUIPMENT ROUGH-IN DRAWINGS. IN SOME INSTANCES, THE OWNER OR SUPPLIER MAY MAKE SUBSTITUTIONS OR THE EQUIPMENT ITEM MAY VARY FROM WHAT IS SHOWN. THEREFORE, THE ARCHITECT/ENGINEER SHALL BE IMMEDIATELY NOTIFIED, PRIOR TO CONSTRUCTION OF ANY DEVIATIONS FROM WHAT IS SHOWN OR IMPLIED ON THESE DRAWINGS. FAILURE OF THE APPROPRIATE CONTRACTOR TO VERIFY ROUGH-INS OR THEIR LOCATIONS SHALL PLACE RESPONSIBILITY FOR ANY SUBSEQUENT RELOCATION AND/OR ADDITIONAL ROUGH-INS DIRECTLY UPON THE CONTRACTOR.

CMW The Shape of Ideas
Architecture
Civil Engineering
Landscape Architecture
a: 249 East Main Street
Suite 100
Lexington, Kentucky 40507
o: (859) 254-6623
w: www.cmwaec.com

CMTA
10411 Meeting Street, Prospect, Kentucky 40059
502.326.3585 | 502.326.2991 | www.cmta.com

COMMONWEALTH OF KENTUCKY — REGISTERED PROFESSIONAL ENGINEER — ROBERT D. HOLLAND — 24321 — LICENSED

MECHANICAL LEGEND AND SCHEDULES

FiveStar #4460 Hopkinsville
NEWCOMB OIL CO., LLC
3070 PEMBROKE RD.
HOPKINSVILLE, KY 42240

CONSTRUCTION DOCUMENTS

Issue Date:	May, 29 2024
Drawn By:	WTD
Checked By:	DRH

Revisions:

Mark	Date

AHJ SEAL

Project Number
24010.01

M-1.01

PLOT DATE: Friday, June 21, 2024 9:59:33 PM

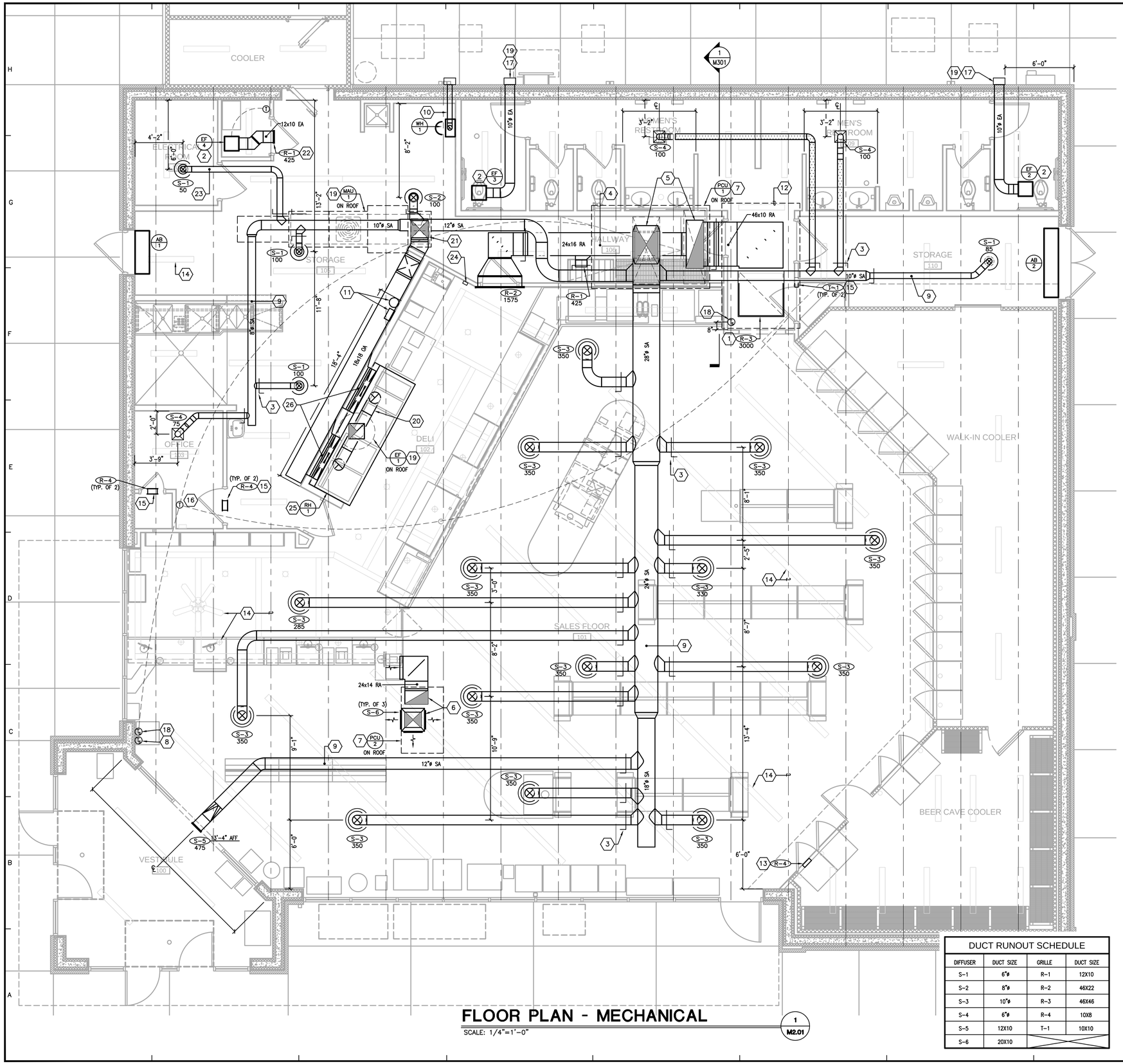

FLOOR PLAN - MECHANICAL

SCALE: 1/4"=1'-0"

1 M2.01

DUCT RUNOUT SCHEDULE

DIFFUSER	DUCT SIZE	GRILLE	DUCT SIZE
S-1	6"ø	R-1	12X10
S-2	8"ø	R-2	46X22
S-3	10"ø	R-3	46X46
S-4	6"ø	R-4	10X8
S-5	12X10	T-1	10X10
S-6	20X10		

GENERAL NOTES:

A. ALL OPEN-CEILING AREAS SHALL UTILIZE A RIGID DUCT CONNECTION (WITH SUPPORTS) TO DIFFUSER. DIFFUSER SHALL BE MOUNTED AT A TYPICAL ELEVATION OF 11'-0" UNLESS OTHERWISE SHOWN ON DRAWING. TYPICAL PLACEMENT OF DIFFUSER IN OPEN-CEILING AREAS ARE CENTERED BETWEEN JOISTS UNLESS SPECIFIC DIMENSION IS SHOWN ON DRAWING.

B. ALL RECTANGULAR, ROUND, AND FLEXIBLE DUCTS SHALL BE SIZED AS SHOWN ON THESE DRAWINGS. MINIMUM INTERNAL DIMENSIONS ARE GIVEN.

C. INSTALL TURNING VANES IN ALL 90 DEGREE SUPPLY AND RETURN DUCT ELBOWS AND AT ALL DUCT TEES.

D. CONDENSATE DRAIN LINES SHALL BE SLOPED AT A MINIMUM 1/8" PER LINEAR FOOT OF RUN. ALL DRAIN EXITS FROM PCU-1 SHALL INCLUDE A TRAP AND CLEAN-OUT PLUG.

E. CONTRACTOR SHALL HAVE ALL THERMOSTATS/TEMPERATURE SENSORS CALIBRATED TO MANUFACTURER'S SPECIFICATIONS PRIOR TO TURNING SYSTEM OVER TO OWNER.

F. BALANCE DIFFUSERS AND GRILLES TO AIRFLOWS INDICATED ON PLAN. PROVIDE AIR-BALANCE REPORT TO GENERAL CONTRACTOR.

G. MANUFACTURER'S RECOMMENDED CLEARANCES SHALL BE MAINTAINED FOR ALL MECHANICAL EQUIPMENT. ALL PIPING VALVES AND MANUAL VOLUME DAMPERS SHALL BE EASILY ACCESSIBLE.

H. FLEXIBLE DUCTWORK IS ALLOWED FOR USE ON CONCEALED DUCTWORK. REFER TO DETAIL SHEET FOR MORE INFORMATION.

I. HATCHED PORTION OF DUCTWORK SHALL BE WRAPPED WITH OWENS/CORNING ALL SERVICE FIBERGLASS DUCT WRAP, "FACED DUCT WRAP – TYPE 75", 3" THICK FIBERGLASS DUCT WRAP, WITH A MINIMUM R-VALUE OF 8, FACTORY LAMINATED TO A REINFORCED FOIL KRAFT VAPOR BARRIER. REFER TO INSULATION CHART ON SHEET M1.01 FOR INSTALLATION REQUIREMENTS.

J. ANY ROUND DUCTWORK EXPOSED TO VIEW SHALL HAVE SPIRAL OUTER SHELL, LOCK-SEAM CONSTRUCTION FABRICATED FROM PAINT GRIP GALVANIZED STEEL MEETING ASTM-527 STANDARDS. ANY DUCTWORK EXPOSED TO VIEW SHALL BE CONSTRUCTED OF G90 GALVANIZED STEEL AND SHALL BE SUPPORTED AS REQUIRED WITH AIRCRAFT CABLES WITH SELF-TIGHTENING LOCKS. EXPOSED METAL DUCT SHALL BE PREPPED AND PAINTED BY OWNER.

K. DUCTWORK, PLENUMS AND OTHER APPURTENANCES SHALL BE CONSTRUCTED OF THE MATERIALS OF THE MINIMUM WEIGHTS OR GAUGES AS REQUIRED BY THE LATEST SMACNA 2" W.G. STANDARD OR BELOW TABLE. WHEN GAUGE THICKNESS DIFFERS, THE HEAVIER GAUGE SHALL BE SELECTED. THE BELOW TABLE SHALL SERVE AS A MINIMUM.

ROUND DIAMETER	DUCT GAUGE	RECTANGULAR WIDTH	DUCT GAUGE
3-12 INCHES	26 GA.	3-12 INCHES	26 GA.
13-18 INCHES	24 GA.	13-30 INCHES	24 GA.
19-28 INCHES	22 GA.	31-54 INCHES	22 GA.

MECHANICAL TAG NOTES: (X)

1. ORIENT RETURN GRILLE SO THAT OPENING IS DIRECTED TOWARD HALLWAY ENTRY (AWAY FROM BATHROOMS). PAINT INTERIOR OF RETURN PLENUM WITH FLAT BLACK PAINT.
2. TRANSITION TO EXHAUST FAN OPENING AS NECESSARY. PROVIDE A 12" LENGTH OF FLEX DUCT AT FAN CONNECTION.
3. PROVIDE HIGH EFFICIENCY TAKEOFFS AND VOLUME DAMPERS IN ALL BRANCH DUCT WORK. REFER TO DETAIL ON SHEET M3.01 FOR ADDITIONAL INFORMATION. TYPICAL OF ALL.
4. INSTALL RETURN DUCTWORK AS HIGH AS POSSIBLE, HOLDING TIGHT TO STRUCTURE. BOTTOM OF DUCT WILL BE AT A MINIMUM OF 9'-0".
5. TRANSITION FROM 28"X28" SA AND 50"X18" RA DUCT TO SIZE OF UNIT OPENING AS NECESSARY USING MITERED-TRANSITIONAL ELBOWS WITH TURNING VANES. PROVIDE FLEX CONNECTION AT UNIT FOR SUPPLY/RETURN DUCTWORK.
6. 24"X24" SA AND 24"X14" RA DUCTS UP TO PCU-2. TRANSITION TO SIZE OF UNIT OPENING AS NECESSARY, PROVIDING FLEX CONNECTION AT UNIT. SUPPLY AIR DUCT SHALL EXTEND 15" BEYOND BOTTOM OF JOISTS WITH DRUM DIFFUSERS MOUNTED ON THREE SIDES AS INDICATED. ROUTE RETURN DUCTWORK WITHIN JOIST SPACE AND PROVIDE EXPANDED METAL GRATE AT END OF DUCT.
7. MAINTAIN A 10'-0" MINIMUM DISTANCE FROM PCU'S OUTDOOR AIR INTAKE AND ANY EXHAUST SOURCE OR PLUMBING VENTS. COORDINATE LOCATION WITH STRUCTURAL AND IN ENSURE MANUFACTURER'S RECOMMENDED SERVICE CLEARANCE IS MAINTAINED. UNIT MUST BE LOCATED A MINIMUM OF 10'-0" AWAY FROM ROOF'S EDGE. SPILL CONDENSATE TO ROOF.
8. INSTALL PCU-2 TEMPERATURE SENSOR IN LOCATION SHOWN. COORDINATE ELEVATION WITH OWNER.
9. SUPPLY DUCT MAIN SHALL BE INSTALLED TO FOLLOW SLOPE OF ROOF WITHIN JOIST SPACE. ALL BRANCH DUCTWORK SHALL BE COORDINATED WITH JOIST OPENINGS.
10. CONCENTRIC WATER HEATER FLUE IS TO BE ROUTED FROM HEATER TO WALL AS SHOWN. INSTALLATION AND TERMINATION SHALL BE PER MANUFACTURER'S RECOMMENDATIONS. MAINTAIN 10'-0" CLEARANCE FROM TERMINATION TO PCU-1'S INTAKE.
11. MOUNT FIRE SUPPRESSION SYSTEM FOR RH-1 AS HIGH AS POSSIBLE. SEE SHEET M1.01 FOR MORE INFORMATION.
12. SPACE IN THIS AREA IS LIMITED. COORDINATE DUCT ROUTING WITH CEILING AND STRUCTURAL JOISTS.
13. TRANSFER GRILLE IS TO BE MOUNTED ABOVE COOLER ROOF, FACING OUT. PROVIDE GRILLE WITH 1/2" MESH SCREEN.
14. CEILING FANS, STRUCTURAL JOISTS, AND LIGHTS ARE SHOWN FOR COORDINATION PURPOSES ONLY. (TYPICAL)
15. TRANSFER AIR GRILLES CENTERED ABOVE DOOR. REFER TO DETAIL SHEET.
16. INSTALL PCU-1 THERMOSTAT IN LOCATION SHOWN CENTERED BETWEEN CLOSET DOOR JAMB AND EDGE OF DRYWALL. INSTALL AT 60" AFF. THERMOSTAT NEEDS TO CONTROL HOT GAS REHEAT ON THE HVAC UNIT. DO SO BY CONNECTING U1 AND U1 ON THE THERMOSTAT IN THE GENERAL MANAGER'S OFFICE TO TERMINAL 7 AND 12 ON THE LTB BOARD LOCATED ON THE HVAC UNIT.
17. EXHAUST CAP AT ELEVATION OF 10'-8". REFER TO DETAIL SHEET FOR MORE INFORMATION.
18. INSTALL PCU-1 TEMPERATURE SENSOR IN LOCATION SHOWN. COORDINATE ELEVATION WITH OWNER PRIOR TO INSTALLATION.
19. MAINTAIN A 10'-0" MINIMUM DISTANCE FROM EXHAUST FAN OUTLET TO PCU-1/MAU-1'S INTAKE. ANY ROOF EQUIPMENT MUST MAINTAIN A 10'-0" MINIMUM DISTANCE BETWEEN EQUIPMENT AND EDGE OF ROOF.
20. ROUTE 12"ø GREASE DUCT (TYPICAL OF 2) FROM RH-1 HOOD OPENING TO 16"ø RISER. TRANSITION DUCTWORK TO FIT ROOF CURB PRIOR TO ROOF PENETRATION. ROOF CUTOUT SHALL BE 26"X26" FOR CURB. GREASE DUCT IS TO BE #16 GAUGE WELDED DUCT. PROVIDE CLEANOUTS AT EACH CHANGE IN DIRECTION. 3M FIREMASTER GREASE DUCT WRAP OR ALTERNATE FULLY ENCAPSULATED AND U.L. CLASSIFIED FOR 0" CLEARANCE TO COMBUSTIBLES (UL R14229) AND ENGINEER APPROVED. BALANCE EACH RUNOUT TO 1,250 CFM.
21. 18X18 OA DUCT UP TO MAU-1. TRANSITION DUCTWORK TO FIT ROOF CURB BEFORE ROOF PENETRATION. ROOF CUTOUT FOR CURB SHALL BE 22"X18".
22. CENTER GRILLE ABOVE DOOR AND ENSURE DOOR HAS 3/4" UNDERCUT.
23. DO NOT ROUTE DUCTWORK DIRECTLY ABOVE ELECTRICAL EQUIPMENT. COORDINATE WITH ELECTRICAL DRAWINGS.
24. PULL STATION LOCATION FOR RANGE HOOD FIRE SUPPRESSION SYSTEM.
25. RANGE HOOD IS OWNER FURNISHED, OWNER INSTALLED.
26. 50"X5" MAKEUP AIR DUCT ROUTED DOWN. TERMINATION POINT SHALL BE BELOW COOKING SURFACE. ALL ELECTRICAL AND PLUMBING CONNECTIONS MUST BE LOCATED BELOW THE BACK RETURN AIR PLENUM.

CMW
The Shape of Ideas
Architecture
Civil Engineering
Landscape Architecture
a: 249 East Main Street
Suite 100
Lexington, Kentucky 40507
o: (859) 254-6623
w: www.cmwaec.com

CMTA
10411 Meeting Street, Prospect, Kentucky 40059
502.326.3585 f 502.326.2991 www.cmta.com

STATE OF KENTUCKY
REGISTERED
PROFESSIONAL
ENGINEER
ROBERT H. LICENSED
ANDERSON
14023
DATE: 5/29/24

FLOOR PLAN - MECHANICAL

FiveStar #4460 Hopkinsville
NEWCOMB OIL CO., LLC
3070 PEMBROKE RD.
HOPKINSVILLE, KY 42240

CONSTRUCTION DOCUMENTS

Issue Date:	May, 29 2024
Drawn By:	WTD
Checked By:	DRH
Revisions:	

Mark	Date

AHJ SEAL

Project Number
24010.01

M-2.01

PLOT DATE: Friday, June 21, 2024 9:18:41 PM

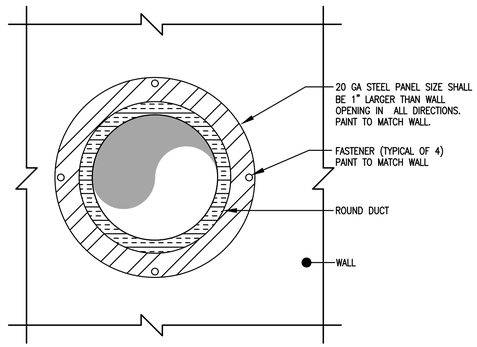

EXPOSED DUCT WALL PENETRATION DETAIL

NOT TO SCALE

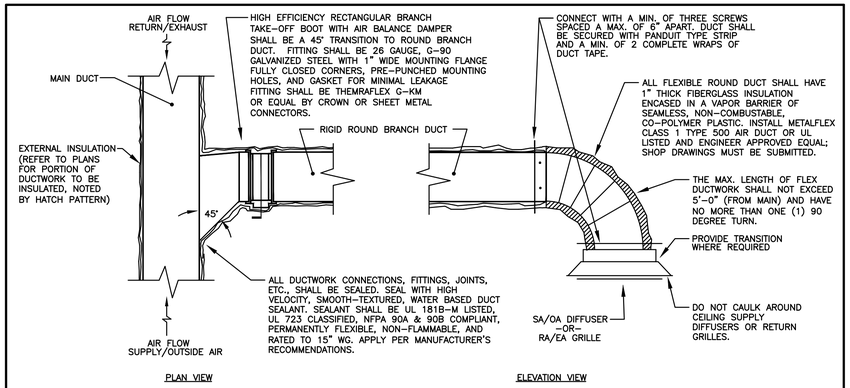

TYPICAL RECTANGULAR-TO-ROUND BRANCH DUCT DETAIL

NOT TO SCALE

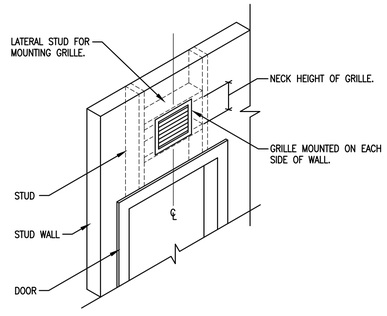

TRANSFER AIR GRILLE DETAIL

NOT TO SCALE

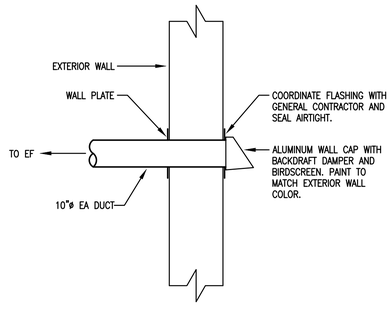

TYPICAL EXHAUST DETAIL

NOT TO SCALE

CONTRACTOR SHALL TAKE DIGITAL PHOTOGRAPHS DURING INSTALLATION FOR REVIEW.

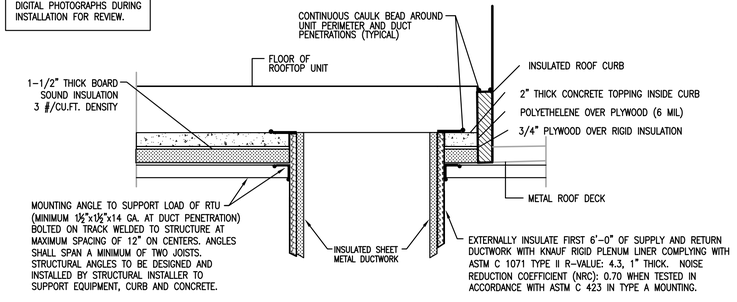

ACOUSTICAL TREATMENT OF PCU-1/2

NOT TO SCALE

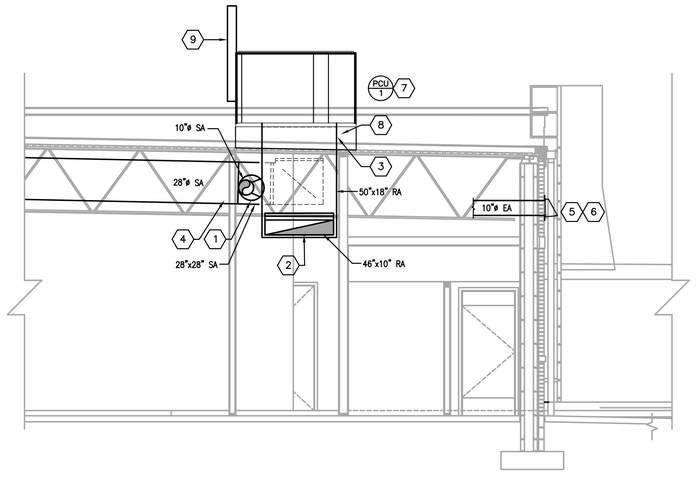

MECHANICAL - SECTION VIEW

SCALE: 1/4"=1'-0"

1 M3.01

GENERAL NOTES:

A. ALL OPEN-CEILING AREAS SHALL UTILIZE A RIGID DUCT CONNECTION (WITH SUPPORTS) TO DIFFUSER. DIFFUSER SHALL BE MOUNTED AT A TYPICAL ELEVATION OF 11'-0" UNLESS OTHERWISE SHOWN ON DRAWING. TYPICAL PLACEMENT OF DIFFUSER IN OPEN-CEILING AREAS ARE CENTERED BETWEEN JOISTS UNLESS SPECIFIC DIMENSION IS SHOWN ON DRAWING.

B. ALL RECTANGULAR, ROUND, AND FLEXIBLE DUCTS SHALL BE SIZED AS SHOWN ON THESE DRAWINGS. MINIMUM INTERNAL DIMENSIONS ARE GIVEN.

C. INSTALL TURNING VANES IN ALL 90 DEGREE SUPPLY AND RETURN DUCT ELBOWS AND AT ALL DUCT TEES.

D. CONDENSATE DRAIN LINES SHALL BE SLOPED AT A MINIMUM 1/8" PER LINEAR FOOT OF RUN. ALL DRAIN EXITS FROM PCU-1 SHALL INCLUDE A TRAP AND CLEAN-OUT PLUG.

E. CONTRACTOR SHALL HAVE ALL THERMOSTATS/TEMPERATURE SENSORS CALIBRATED TO MANUFACTURER'S SPECIFICATIONS PRIOR TO TURNING SYSTEM OVER TO OWNER.

F. BALANCE DIFFUSERS AND GRILLES TO AIRFLOWS INDICATED ON PLAN. PROVIDE AIR-BALANCE REPORT TO GENERAL CONTRACTOR.

G. MANUFACTURER'S RECOMMENDED CLEARANCES SHALL BE MAINTAINED FOR ALL MECHANICAL EQUIPMENT. ALL PIPING VALVES AND MANUAL VOLUME DAMPERS SHALL BE EASILY ACCESSIBLE.

H. FLEXIBLE DUCTWORK IS ALLOWED FOR USE ON CONCEALED DUCTWORK. REFER TO DETAIL SHEET FOR MORE INFORMATION.

I. HATCHED PORTION OF DUCTWORK SHALL BE WRAPPED WITH OWENS/CORNING ALL SERVICE FIBERGLASS DUCT WRAP, "FACED DUCT WRAP - TYPE 75", 3" THICK FIBERGLASS DUCT WRAP, WITH A MINIMUM R-VALUE OF 8, FACTORY LAMINATED TO A REINFORCED FOIL KRAFT VAPOR BARRIER. REFER TO INSULATION CHART ON SHEET M1.01 FOR INSTALLATION REQUIREMENTS.

J. ANY ROUND DUCTWORK EXPOSED TO VIEW SHALL HAVE SPIRAL OUTER SHELL LOCK-SEAM CONSTRUCTION FABRICATED FROM PAINT GRIP GALVANIZED STEEL MEETING ASTM-527 STANDARDS. ANY DUCTWORK EXPOSED TO VIEW SHALL BE CONSTRUCTED OF G90 GALVANIZED STEEL AND SHALL BE SUPPORTED AS REQUIRED WITH AIRCRAFT CABLES WITH SELF-TIGHTENING LOCKS. EXPOSED METAL DUCT SHALL BE PREPPED AND PAINTED BY OWNER.

K. DUCTWORK, PLENUMS AND OTHER APPURTENANCES SHALL BE CONSTRUCTED OF THE MATERIALS OF THE MINIMUM WEIGHTS OR GAUGES AS REQUIRED BY THE LATEST SMACNA 2" W.G. STANDARD OR BELOW TABLE. WHEN GAUGE THICKNESS DIFFERS, THE HEAVIER GAUGE SHALL BE SELECTED. THE BELOW TABLE SHALL SERVE AS A MINIMUM.

ROUND DIAMETER	DUCT GAUGE	RECTANGULAR WIDTH	DUCT GAUGE
3-12 INCHES	26 GA.	3-12 INCHES	26 GA.
13-18 INCHES	24 GA.	13-30 INCHES	24 GA.
19-28 INCHES	22 GA.	31-54 INCHES	22 GA.

MECHANICAL TAG NOTES: (X)

1. PROVIDE HIGH EFFICIENCY TAKEOFFS AND VOLUME DAMPERS IN ALL BRANCH DUCT WORK. REFER TO DETAIL ON THIS SHEET FOR ADDITIONAL INFORMATION. TYPICAL OF ALL.
2. INSTALL RETURN DUCTWORK AS HIGH AS POSSIBLE, HOLDING TIGHT TO STRUCTURE. BOTTOM OF DUCT WILL BE AT A MINIMUM OF 9'-0".
3. TRANSITION FROM 28"X28" SA AND 50"X18" RA DUCT TO SIZE OF UNIT OPENING AS NECESSARY USING MITERED-TRANSITIONAL ELBOWS WITH TURNING VANES. PROVIDE FLEX CONNECTION AT UNIT FOR SUPPLY/RETURN DUCTWORK.
4. SUPPLY DUCT MAIN SHALL BE INSTALLED TO FOLLOW SLOPE OF ROOF WITHIN JOIST SPACE. ALL BRANCH DUCTWORK SHALL BE COORDINATED WITH JOIST OPENINGS.
5. EXHAUST CAP AT ELEVATION OF 10'-8". REFER TO DETAIL THIS SHEET FOR MORE INFORMATION.
6. MAINTAIN A 10'-0" MINIMUM DISTANCE FROM EXHAUST FAN OUTLET TO MECHANICAL EQUIPMENT'S INTAKE.
7. MAINTAIN A 10'-0" MINIMUM DISTANCE FROM PCU-1'S OUTDOOR AIR INTAKE AND ANY EXHAUST SOURCE OR PLUMBING VENTS. COORDINATE LOCATION WITH STRUCTURAL AND IN ENSURE MANUFACTURER'S RECOMMENDED SERVICE CLEARANCE IS MAINTAINED. UNIT MUST BE LOCATED A MINIMUM OF 10'-0" AWAY FROM ROOF'S EDGE. SPILL CONDENSATE TO ROOF.
8. REFERENCE "ACOUSTICAL TREATMENT OF PCU-1" DETAIL (THIS SHEET) FOR MORE INFORMATION.
9. 20 GAUGE STAINLESS STEEL, ACCESSORY FLUE STACK BY THYBAR CORPORATION TO MATCH TRANE MODEL. EXTEND THE FLUE STACK 36" ABOVE UNIT'S MECHANICAL INTAKE. THE STACK IS TO BE MOUNTED JUST ABOVE THE FLUE OPENING AND IN LINE WITH TRANE PANEL AS TO NOT OBSTRUCT EQUIPMENT'S SERVICE CLEARANCE AND ACCESS PANELS.

CMW
The Shape of Ideas
Architecture
Civil Engineering
Landscape Architecture
a: 249 East Main Street Suite 100 Lexington, Kentucky 40507
o: (859) 254-6623
w: www.cmwaec.com

CMTA
10411 Meeting Street, Prospect, Kentucky 40059
502.326.3585 f 502.326.2991 www.cmta.com

STATE OF KENTUCKY REGISTERED PROFESSIONAL ENGINEER ROBERT A. HUTCHINSON 24021 LICENSED

MECHANICAL SECTION VIEWS AND DETAILS

FiveStar #4460 Hopkinsville
NEWCOMB OIL CO., LLC
3070 PEMBROKE RD.
HOPKINSVILLE, KY 42240

CONSTRUCTION DOCUMENTS

Issue Date:	May, 29 2024
Drawn By:	WTD
Checked By:	DRH
Revisions:	

Mark	Date

AHJ SEAL

Project Number
24010.01

M-3.01

PLOT DATE: Friday, June 21, 2024 5:18:40 PM

LIGHT FIXTURE SCHEDULE :

TYPE	DESCRIPTION	MODEL	LAMPS	REMARKS	VOLTAGE
A4 **72 FIXTURES**	4' LED WITH HIGH STRENGTH POLYMER REFLECTOR AND HOUSING WITH TROUGH WIRING CHANNEL AND SURFACE OR SUSPENDED MOUNTING. PROVIDE 4000 LUMEN PACKAGE WITH 3500K COLOR TEMPERATURE.	**LSI DW HO CW UE**	LED'S INCLUDED.	PROVIDE WITH A MINIMUM 80 CRI AND 10 YEAR WARRANTY **MOUNT AT 11' ABOVE FINISHED FLOOR.**	120V
A4E **7 FIXTURES**	SAME FIXTURE AS "A4" BUT WITH EMERGENCY BATTERY.	**LSI DW HO CW UE EM**	LED'S INCLUDED.	PROVIDE WITH A MINIMUM 80 CRI AND 10 YEAR WARRANTY **MOUNT AT 11' ABOVE FINISHED FLOOR.**	120V
C **15 FIXTURES**	SURFACE VAPOR TIGHT LED WITH IMPACT RESISTANT FIBERGLASS HOUSING AND POLYCARBONATE LENS. PROVIDE WITH 3500K COLOR TEMPERATURE AND 6000 LUMEN OUTPUT.	**LSI EG3 4 S LED HO CW UE**	LED'S INCLUDED.	PROVIDE WITH A MINIMUM 80 CRI AND MINIMUM LM-80 RATING.	120V
EB **2 FIXTURES**	LED COMPATIBLE, 375W, 90 MINUTE, SINE WAVE INVERTER WITH MAINTENANCE FREE BATTERY.	**IOTA IIS 375 LED**	NO LAMPS	PROVIDE SURFACE MOUNTED IN STORAGE ROOM AS INDICATED.	120V
F **5 FIXTURES**	6" RECESSED LED DOWNLIGHT WITH SPECIFICATION GRADE REFLECTOR AND GALVANIZED STEEL FRAME.	**RP 61100358/IC630C**	LED'S INCLUDED.		120V
G **10 FIXTURES**	LED SURFACE LIGHT WITH 5700K COLOR TEMPERATURE, DIE CAST ALUMINUM HOUSING WITH SYMMETRIC TYPE 5 DISTRIBUTION.	**LSI CRU SM SC LED HO CW UE MSV**	LED'S INCLUDED.	PROVIDE WITH A MINIMUM 69 CRI. PROVIDE WITH A MINIMUM 90 LUMENS PER WATT PROVIDE WITH A MINIMUM 90% LUMEN MAINTENANCE AT 50,000 HOURS OF USE.	120V
H	LED COVE LIGHTING.	**(1) LSI-LDL3-12-LED-CW-24** **(6) LSI LDL3-48-LED-CW-24** **(6) LSI 12" JUMPER 35148302** **(1) LSI RPSE40 LED 120 POWER SUPPLY** **(2) LSI RPSE100 LED 120 POWER SUPPLY**	LED'S INCLUDED.	PROVIDE LENGTH AS INDICATED ON PLANS. PROVIDE WITH A MINIMUM 85 CRI.	120V
J **9 FIXTURES**	18" STEMS WITH CANOPY.	**(7) LSI-AUP-S-LED-HO-NW ACF16 GWT FROSTED LENS** **(7) LSI BC 600 3 GWT CANOPY**	LED'S INCLUDED.	**PROVIDE WITH 18" DOWN ROD FOR MOUNTING BELOW BEAMS**	120V
K **10 FIXTURES**	100 WATT 9" PENDANT WITH GALVANIZED HOUSING AND BLACK CORD.	**BARNLIGHT BLE-C-LAR PC. LED12 975 SBK 1250 FL 120**	LED'S INCLUDED.	COORDINATE SUSPENSION LENGTH WITH OWNER AND ARCHITECT.	120V
M **3 FIXTURES**	WALL MOUNT LED WITH CAST ALUMINUM HOUSING AND TEMPERED GLASS LENS.	**LSI PWMS LED HO CW UE BLK**	LED'S INCLUDED.		120V
X1 **2 FIXTURES**	EXIT LIGHT WITH DUAL HEAD EMERGENCY LIGHTING AND BATTERY BACK UP.	**LSI PRX RU BK LD11**	LED'S INCLUDED.	PROVIDE WITH BATTERY CAPACITY TO POWER ALL ASSOCIATED EMERGENCY HEADS FOR 90 MINUTES.	120V
XX **2 FIXTURES**	DUAL HEAD EXTERIOR REMOTE EMERGENCY LIGHTING HEADS	**LSI 2TMLED BLK**	LAMPS INCLUDED	PROVIDE BATTERY BACK UP FROM NEAREST EXIT SIGN AS INDICATED ON PLANS.	120V
X2 **3 FIXTURES**	EXIT LIGHT WITH DUAL HEAD EMERGENCY LIGHTING AND BATTERY BACK UP.	**LSI LPRX R U BK LD11 R**	LED'S INCLUDED.	PROVIDE WITH BATTERY CAPACITY TO POWER ALL ASSOCIATED EMERGENCY HEADS FOR 90 MINUTES.	120V
XX2 **4 FIXTURES**	SINGLE HEAD EXTERIOR REMOTE EMERGENCY LIGHTING HEADS	**LSI TMLED WH BLK**	LAMPS INCLUDED	PROVIDE BATTERY BACK UP FROM NEAREST EXIT SIGN AS INDICATED ON PLANS.	120V
CEILING FANS **3 FIXTURES**		**MEJA 52" CEILING FAN, FLUSH MOUNTED CEILING, WHITE**			

EXTERIOR LIGHTING TIMECLOCK:

PROVIDE INTERMATIC ET90115C SINGLE CIRCUIT 365 DAY TIME CLOCK FOR EXTERIOR LIGHTING THROUGH SHUNT TRIP FUNCTION OF PANEL "D1"

SYSTEM	ITEM	DEVICE MODEL # REFER TO SPECS. IF NONE LISTED	BACKBOX COVER IF APPLICABLE	MOUNTING HEIGHT	DRAWING SYMBOL
SWITCHES	LIGHT SWITCH: GENERAL PURPOSE			4'-0"	$
	DIMMER SWITCH			4'-0"	$D
	THREE-WAY SWITCH			4'-0"	$3
	DUAL TECHNOLOGY, ULTRASONIC WALL MOUNTED TYPE OCCUPANCY SENSOR	SENSORSWITCH #WSD-PDT		4'-0"	$OS
	PILOT LIGHT SWITCH (ILLUMINATED WHEN LOAD IS ON)			4'-0"	$PL
	CEILING MOUNTED OCCUPANCY SENSOR	RAB ELECTRIC LIGHT ALERT SMART SWITCH - LOS2400			OS
LIGHTING	2'-0" FLUORESCENT WALL MOUNT	SEE SCHEDULE		6'-6"	
SHADING INDICATES EMERGENCY OPERATION, DIAGONAL SLASH INDICATES RECESSED	2'x2' FLUORESCENT TROFFER	SEE SCHEDULE		CEIL.	
	2'x4' FLUORESCENT TROFFER	SEE SCHEDULE		CEIL.	
	1'x4' FLUORESCENT TROFFER	SEE SCHEDULE		CEIL.	
	DOWNLIGHT	SEE SCHEDULE		CEIL.	
	EXIT LIGHT(CEILING, WALL MOUNT)	SEE SCHEDULE		AS NOTED	E, E
POWER OUTLETS	SIMPLEX			1'-6"	
	DUPLEX - SAFETY TYPE			1'-6"	S
	DUPLEX			1'-6"	
	DUPLEX (ABOVE COUNTERTOP)			8" ACT.	
	DUPLEX WITH INTEGRAL GROUND FAULT PROTECTION			1'-6"	GFI
	GANG RECEPTACLE IN COMBINATION WITH SWITCH. (PROVIDE DIVIDER IF LIGHTING CIRCUIT IS 277V)			4'-0"	C/S
	QUADRUPLEX RECEPTACLE			1'-6"	
	JUNCTION BOX				J
	208/1ø RECEPTACLE, AS NOTED			AS NOTED	
	208/3ø RECEPTACLE, AS NOTED			1'-6"	
MISC.	DUPLEX - SURGE SUPPRESSION TYPE			1'-6"	SS
	DUPLEX - WALL MOUNTED			4'-0"	W
	WEATHER RESISTANT DUPLEX - WITH WEATHER-PROOF "WHILE IN USE" TYPE DIE-CAST METAL COVERPLATE WITH LOCKABLE ENCLOSURE AT OUTLET. INTERMATIC GAURDIAN SERIES OR EQUAL.			1'-6"	WP
	CONDUIT CONCEALED IN WALLS OR IN CEILING SPACE. ARROW(S) INDICATE(S) HOME RUN & / OR CIRCUITS. HASHMARKS INDICATE # OF CONDUCTORS				GROUND NEUTRAL Ø
	DISCONNECT SWITCH			5'-0"	
	MAGNETIC STARTER			5'-0"	
	MAGNETIC COMBINATION STARTER			5'-0"	
	ENCLOSED FLUSH MTD. CIRCUIT BREAKER			5'-0"	
	WEATHERPROOF				WP
	EMERGENCY PANELBOARD, SURFACE OR FLUSH MOUNTED			6'-6" TO TOP	
	NORMAL PANELBOARD, SURFACE OR FLUSH MOUNTED			6'-6" TO TOP	
	M.E.S. (MAJOR EQUIPMENT SCHEDULE) # INDICATOR				
	TAGGED NOTE				
	REVISION NOTE				
	MECHANICAL EQUIPMENT DESIGNATOR (SEE MECH. SCHEDULES)				
	JUNCTION BOX		AS NOTED	AS NOTED	J
	PROVIDE CONNECTION TO HAND DRYER			AS NOTED	Ø
	PLUMBING FIXTURE SOLENOID VALVE/ELECTRIC EYE SENSOR CONNECTION. COORDINATE EXACT CONNECTION REQUIREMENTS WITH MANUFACTURER.				
	PLUMBING FIXTURE ELECTRIC EYE TRANSFORMER CONNECTION. TRANSFORMER SHALL BE 120V-24V. MOUNT ABOVE SUSPENDED ACCESSIBLE CEILING IN J-BOX. PROVIDE ADDITIONAL TRANSFORMERS OF SAME TYPE AS/IF NEEDED.				Y

SYSTEM	ITEM	DEVICE MODEL # REFER TO SPECS. IF NONE LISTED	BACKBOX COVER IF APPLICABLE	MOUNTING HEIGHT	DRAWING SYMBOL
SPECIAL OUTLETS	PLUMBING FIXTURE SOLENOID VALVE/ ELECTRIC EYE SENSOR CONNECTION. COORDINATE EXACT CONNECTION REQUIREMENTS WITH MANUFACTURER.				
	PLUMBING FIXTURE ELECTRIC EYE TRANSFORMER CONNECTION. TRANSFORMER SHALL BE 120V- 24V AND SUPPLIED WITH PLUMBING FIXTURE. MOUNT ABOVE SUSPENDED ACCESSIBLE CEILING AS REQUIRED. PROVIDE ADDITIONAL TRANSFORMERS OF SAME TYPE AS/IF NEEDED.				Y
DATA / VOICE / VIDEO	DATA OUTLET : NUMBER BESIDE OUTLET INDICATES NUMBER OF DATA JACKS TO BE PROVIDED AND INSTALLED. IF NO NUMBER IS INDICATED, THERE SHALL BE ONLY ONE DATA JACK.		1G	1'-6"	20, 30

AS BUILT DRAWINGS:

CONTRACTOR SHALL PROVIDE DETAILED AS BUILT DOCUMENTS UPON COMPLETION OF CONSTRUCTION INCLUDING A DIMENSIONED PLAN SHOWING LOCATIONS OF ALL CONDUITS.

GENERAL NOTES (APPLICABLE TO ALL WORK AND DOCUMENTS) :

1. EACH CONTRACTOR, PROPOSER, SUPPLIER AND/OR MANUFACTURER SHALL REFER TO ALL DOCUMENTS PERTAINING TO THIS PROJECT AND COORDINATE ACCORDINGLY SO AS TO INSURE ADEQUACY OF FIT, COMPLIANCE WITH SPECIFICATIONS, PROPER VOLTAGE AND CURRENT CHARACTERISTICS TO AVOID CONFLICT WITH ANY OTHER BUILDINGS SYSTEMS. VERIFY SAME WITH SHOP DRAWINGS.
2. OBSERVE ALL APPLICABLE CODES, RULES AND REGULATIONS THAT MAY APPLY TO THE WORK UNDER THIS CONTRACT. (CITY, COUNTY, LOCAL, STATE, FEDERAL, MUNICIPALITY, UTILITY COMPANY, OSHA, ETC.)
3. INSTALL EQUIPMENT, MATERIALS, ETC. IN STRICT ACCORD WITH MANUFACTURERS' RECOMMENDATIONS AND DIRECTIONS. IF IN CONFLICT WITH THE DESIGN INDICATED IN CONTRACT DOCUMENTS, ADVISE THE ENGINEERS PRIOR TO INSTALLATION FOR CLARIFICATION.
4. THE PURPOSE AND INTENT OF ALL OF THE DOCUMENTS PERTAINING TO THIS PROJECT IS TO PROVIDE A COMPLETE, FUNCTIONAL, SAFE, LIKE NEW FACILITY. ANYTHING LESS SHALL BE UNACCEPTABLE.
5. WHERE PENETRATING ROOFING MEMBRANE OR OTHER MATERIALS USED FOR WEATHERPROOFING THE BUILDING, MAKE SUCH PENETRATIONS IN A WAY THAT WILL NOT VOID OR DIMINISH THE ROOFING WARRANTY OR INTEGRITY IN ANYWAY. COORDINATE ALL SUCH PENETRATIONS WITH THE ROOFING INSTALLER.
6. REFER TO ARCHITECTURAL FLOOR PLANS, ELEVATIONS AND CASEWORK DETAILS FOR LOCATION OF RECEPTACLES, UTILITY OUTLETS, ELECTRICAL DEVICES, ETC.
7. UNLESS OTHERWISE SPECIFIED OR INDICATED, INSTALL LIGHT FIXTURES, DIFFUSERS, REGISTERS, GRILLES, SPRINKLER HEADS, SMOKE DETECTORS AND OTHER CEILING MOUNTED APPURTENANCES IN THE CEILING IN A SYMMETRICAL PATTERN, UNLESS SPECIFICALLY INDICATED OTHERWISE ON THE ARCHITECTURAL REFLECTED CEILING PLANS.
8. ANY VIBRATING, OSCILLATING OR OTHER NOISE OR MOTION PRODUCING EQUIPMENT SHALL BE ISOLATED FROM SURROUNDING SYSTEMS IN AN APPROVED MANNER. NOISY OR STRUCTURALLY DAMAGING INSTALLATIONS SHALL BE SATISFACTORILY REPLACED OR REPAIRED AT THE INSTALLING CONTRACTORS' EXPENSE. THE FINAL DECISION ON THE SUITABILITY OF A PARTICULAR INSTALLATION'S ACCEPTABILITY SHALL BE THAT OF THE ENGINEER.
9. ALL ELECTRICAL COMPONENTS OR EQUIPMENT SHALL BE LABELED BY UNDERWRITER'S LABORATORIES OR OTHER APPROVED LISTING AGENCY. APPROVED AND LABELING OF INDIVIDUAL COMPONENTS ON AN ASSEMBLY IS NOT ACCEPTABLE AS MEETING THIS REQUIREMENT, UNLESS WAIVED BY THE ENGINEER IN WRITING.
10. ALL SUPPORTS FOR EQUIPMENT, DEVICES OR FIXTURES SHALL BE UNIQUE, FROM THE BUILDING STRUCTURE. DO NOT SUPPORT WORK FROM OTHER TRADES, EQUIPMENT OR SUPPORTS WITHOUT WRITTEN PERMISSION FROM THE ENGINEER AND CONSENT OF THE OTHER TRADE, IN WRITING.
11. WHERE EXIT LIGHTS ARE CONNECTED TO EMERGENCY CIRCUITS WITH KEYSWITCH OR CONTACTOR CONTROL, AN UNSWITCHED LINE SHALL BE PULLED IN TO MAINTAIN THEIR OPERATION REGARDLESS OF SWITCH POSITION.
12. WHERE EXIT SIGNS OR EMERGENCY BATTERY PACKS ARE PROVIDED, THEY SHALL BE CONNECTED TO AN UNSWITCHED LINE.
13. WHERE OUTLETS ARE LOCATED APPROXIMATELY BACK-TO-BACK ON OPPOSITE SIDES OF A PARTY WALL, THE OUTLETS SHALL NOT BE INSTALLED IN THE SAME STUD SPACE, BUT SHALL BE SEPARATED BY A MINIMUM OF ONE STUD, UNLESS OTHERWISE APPROVED BY THE ARCHITECT.
14. ALL MATERIALS FURNISHED AND ALL WORK INSTALLED SHALL COMPLY WITH THE CURRENT EDITION OF THE NATIONAL ELECTRICAL CODES, NATIONAL FIRE CODES OF THE NATIONAL FIRE PROTECTION ASSOCIATION, THE REQUIREMENTS OF LOCAL UTILITY COMPANIES, AND WITH THE REQUIREMENTS OF ALL GOVERNMENTAL AGENCIES OR DEPARTMENTS HAVING JURISDICTION. IF ANY CONFLICTS OR DISCREPANCIES OCCUR THE MOST STRINGENT SHALL APPLY.
15. DO NOT SCALE FROM DRAWINGS, AS PRINTING DISTORTS SCALE. WORK SHALL BE LAID OUT FROM DIMENSIONED DRAWINGS, OR DIMENSIONS SUPPLIED TO THE CONTRACTOR.
16. IF A CANOPY DEDICATED TO DISPENSING DIESEL FUEL IS TO BE CONSTRUCTED, PROVIDE WIRING FOR AN EMRGENCY STOP OUTSIDE OF THE BUILDING ON THE CLOSEST CORNER.

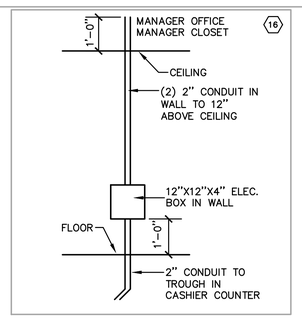

01 E100 **WALL BOX DETAIL** NO SCALE

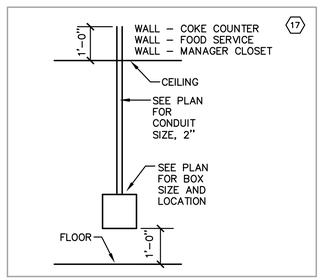

02 E100 **WALL BOX DETAIL** NO SCALE

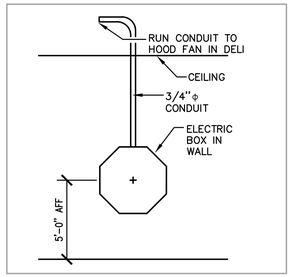

03 E100 **DELI HOOD FAN SAFETY SWITCH DETAIL** NO SCALE

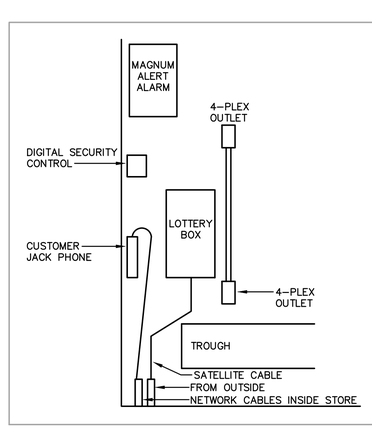

04 E100 **PART. ELEC. ROOM TROUGH ELEVATION** NO SCALE

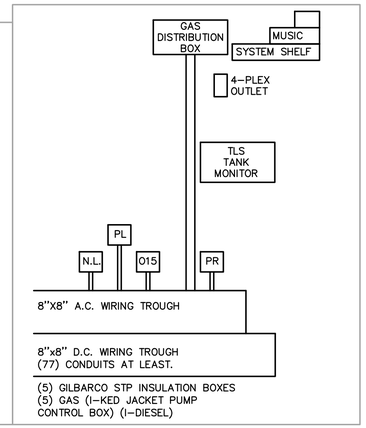

05 E100 **PART. ELEC. ROOM TROUGH ELEVATION** NO SCALE

CMW The Shape of Ideas
Architecture
Civil Engineering
Landscape Architecture
a: 249 East Main Street Suite 100 Lexington, Kentucky 40507
o: (859) 254-6623
w: www.cmwaec.com

CMTA
15411 Meeting Street, Prospect, Kentucky 40059
502.326.3585 | 502.326.2991 | www.cmta.com

COMMONWEALTH OF KENTUCKY BRAD PERCY 28424 LICENSED PROFESSIONAL ENGINEER

ELECTRICALL LEGEND AND NOTES

FiveStar #4460 Hopkinsville
NEWCOMB OIL CO., LLC
3070 PEMBROKE RD.
HOPKINSVILLE, KY 42240

CONSTRUCTION DOCUMENTS

Issue Date:	May, 29 2024
Drawn By:	WTD
Checked By:	DRH
Revisions:	

Mark	Date

AHJ SEAL

Project Number **24010.01**

E-1.00

PLOT DATE: Friday, June 21, 2024 12:26:05 PM

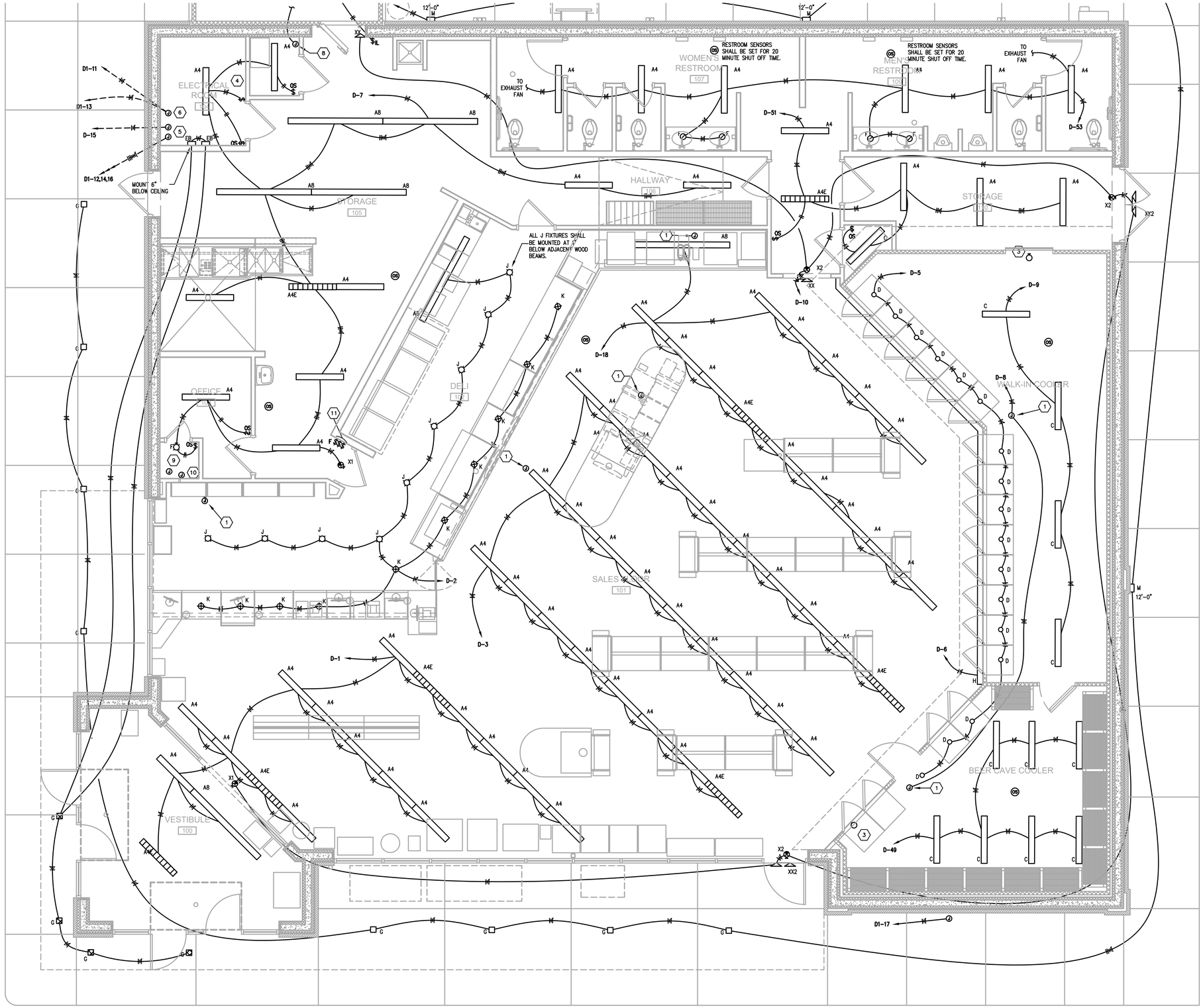

PARTIAL FLOOR PLAN - LIGHTING

1/4" = 1'-0"

GENERAL NEW WORK NOTES (LIGHTING):

A. REFER TO THE ARCHITECT'S REFLECTED CEILING PLANS FOR EXACT LOCATIONS OF ALL CEILING MOUNTED LIGHT FIXTURES ETC. REFER ALSO TO THE ARCHITECT'S CASEWORK DETAILS AND ROOM ELEVATIONS FOR EXACT LOCATIONS AND MOUNTING HEIGHTS OF LIGHT FIXTURES, ETC.

B. ALL NEW WIRING SHALL BE #12 WITH A #12 INSULATED GROUND WIRE (U.O.N.). CONDUIT SHALL BE 3/4" MINIMUM.

C. CONTRACTOR SHALL FOLLOW BRANCH CIRCUITING LAY-OUT, AS INDICATED ON THE FLOOR PLANS, WITH A MAXIMUM OF THREE (3) BRANCH CIRCUITS PER HOMERUN. EACH BRANCH CIRCUIT SHALL BE PROVIDED WITH A DEDICATED NEUTRAL CONDUCTOR. DEDICATED NEUTRAL CONDUCTORS SHALL BE CONSIDERED CURRENT CARRYING. IF ADDITIONAL CONDUCTORS ARE RAN IN THE SAME CONDUIT WITH THOSE INDICATED, CONTRACTOR SHALL DERATE ALL CURRENT CARRYING CONDUCTORS PER N.E.C. §310.15(B)(3), AND UPSIZE CONDUIT AS REQUIRED PER N.E.C. §300.17 AND ANNEX C. MULTIWIRE BRANCH CIRCUITS AS DEFINED IN N.E.C §100 / 210.4 (CIRCUITS SHARING A COMMON NEUTRAL CONDUCTOR) SHALL NOT BE PERMITTED.

D. ALL UNDERGROUND TRENCHES SHALL BE FILLED WITH STONE.

E. MC CABLING SHALL BE ACCEPTABLE WHERE CONCEALED IN WALLS AND CEILINGS. EMT SHALL BE USED AT ALL EXPOSED LOCATIONS.

F. A DIMENSIONED AND DETAILED AS-BUILT PLAN SHALL BE PROVIDED BY THE CONTRACTOR INDICATING ALL CONDUIT ROUTES. THE CONTRACTOR SHALL TAKE AND PROVIDE PHOTOS OF ALL UNDERGROUND UTILITIES PRIOR TO COVERING OF TRENCHES.

G. ALL EMPTY CONDUITS FOR FUTURE USE SHALL BE PROVIDED WITH A PULL STRING.

H. ALL CONDUITS STUBBED UP FROM FLOOR INTO WIRING TROUGH SHALL BE SEALED AS REQUIRED FOR GAS SEALS. THIS SHALL APPLY TO ALL CONDUITS IN THE TROUGH WHETHER SERVING GAS EQUIPMENT OR NOT.

I. ALL SWITCHES SHALL BE MOUNTED AS TIGHT TO DOOR FRAMES AS POSSIBLE TO MAXIMIZE AVAILABLE WALL SPACE. PROVIDE MULTIGANG SWITCHBOXES WHEREVER POSSIBLE. NO SWITCHES SHALL BE MOUNTED ANY MORE THAN 12" FROM DOOR FRAME.

TAGGED NOTES (LIGHTING) :

1. DECORATIVE GRAPHICS LIGHTING J-BOX. ROUTE ALL CONDUIT AND WIRING CONCEALED TO SIGNAGE. PROVIDE BOX IN VERTICAL FACE OF SOFFIT AS REQUIRED. CONNECTION SHALL BE CENTERED OVER SHELVING AND LOCATED 9" ABOVE THE TOP OF THE OPENING. CONTROL WITH INTERIOR LIGHTING. PROVIDE WITH 14-1/2" WIDE X 6" TALL X 4" DEEP JUNCTION BOX ACCESSIBLE FROM THE MANAGER'S OFFICE WITH ONE CIRCUIT AND NIPPLE OUT THE BACKSIDE TO FEED SIGN. MOUNT 8-1/2" ABOVE FINISHED OPENING CENTERED OVER SHELVING. COORDINATE EXACT ELEVATION WITH ALL TRADES PRIOR TO ROUGH-IN.
2. EXTERIOR LIGHTING CIRCUIT SHALL BE CONTROLLED THROUGH EXTERIOR LIGHTING PHOTOCELL AS REQUIRED. PROVIDE UNSWITCHED CONDUCTOR BYPASSING PHOTOCELL FOR CONNECTION TO BATTERY BACK UP "EB" DEVICES IN OFFICE 103..
3. FREEZER VAPOR PROOF LIGHT PROVIDED WITH COOLER SHALL NOT BE CONNECTED.
4. PROVIDE SWITCH AT LOCATION INDICATED FOR OVERRIDE OF OCCUPANCY SENSOR IN ROOM. SWITCH SHALL PROVIDE BYPASS OF OCCUPANCY SENSOR RELAY AS REQUIRED FOR OVERRIDE.
5. PROVIDE CONNECTIONS TO SITE LIGHTING POLES AS REQUIRED BY SITE PLAN. PROVIDE ADDITIONAL CIRCUIT TO EACH LIGHTING POLE MARKED WITH AN ASTERISK FOR BASE MOUNTED RECEPTACLE. RECEPTACLE SHALL BE MOUNTED ON POLE BASE AND NOT AT POLE ACCESS BOX. REFER TO SITE SPECIFIC DRAWINGS FOR FURTHER REQUIREMENTS.
6. REFER TO SITE SPECIFIC PLANS FOR EXACT SIGN LOCATIONS AND REQUIREMENTS. SITE SIGNAGE SHALL BE WIRED IN THE FOLLOWING MANNER:
   - 6.A. (2) 1" CONDUITS FROM THE ELECTRICAL ROOM TO EACH SIGN. DO NOT LOOP CONDUITS FROM ON SIGN TO ANOTHER,
   - 6.B. ON THE POLE SIGN, PROVIDE (2) 3/4" CONDUITS THAT LOOP FROM ONE LEG OF THE SIGN TO THE OTHER LEG OF THE SIGN.
   - 6.C. ONE CONDUIT TO EACH SIGN SHALL HAVE (3) 120V 20 AMP CIRCUITS WITH #10 CONDUCTORS AND GROUND FOR EACH CIRCUIT. (2) CIRCUITS SHALL ALWAYS BE HOT AND ONE SHALL BE SWITCHED WITH THE EXTERIOR LIGHTING PHOTOCELL.
   - 6.D. ONE CONDUIT TO EACH SIGN IS FOR FUTURE LOW VOLTAGE USE. THIS CONDUIT SHALL NOT BE LOOPED BETWEEN SIGNS.
   - 6.E. THE SIGN CONDUIT SHALL NOT BE COMBINED WITH AREA LIGHTING. ALL AREA LIGHTS SHALL BE FEED THROUGH SEPARATE CONDUITS.
   - 6.F. ALL BUILDING SIGNS SHALL BE INSTALLED BY THE ELECTRICAL CONTRACTOR.
7. PROVIDE PERMANENT LABELS ON SWITCHES TO INDICATE LOAD SERVED.
8. PROVIDE 2" CONDUIT FROM NEW SATELLITE LOCATION TO ELECTRIC ROOM. SATELLITE WILL NEED TO BE LOCATED TO A NON CANOPY LOCATION OUT THE BACK OF THE STORE FACING SOUTH EAST.
9. PROVIDE 1" CONDUIT FROM CLOSET TO ALL SITE CANOPIES FOR SURVEILLANCE CAMERAS. COORDINATE EXACT REQUIREMENTS WITH SITE PLANS.
10. PROVIDE 2" CONDUIT FROM OFFICE CLOSET TO 12" ABOVE ATTIC INSULATION.
11. PROVIDE SWITCHES WITH PERMANENT LABELS INDICATING FUNCTION FOR THE FOLLOWING ITEMS:
    - 11.A. INTERIOR LIGHTING SWITCH: INTERIOR LIGHTING CIRCUITS SHALL BE ROUTED THROUGH INTERIOR LIGHTING CONTACTOR FOR CONTROL OF ALL INTERIOR ZONE
    - 11.B. EXTERIOR LIGHTING SWITCH: SHALL OVERRIDE EXTERIOR LIGHTING CONTACTOR.
    - 11.C. FAN SPEED CONTROL SWITCH.

CMW
The Shape of Ideas
Architecture
Civil Engineering
Landscape Architecture
a: 249 East Main Street
Suite 100
Lexington, Kentucky 40507
o: (859) 254-6623
w: www.cmwaec.com

CMTA
10411 Meeting Street, Prospect, Kentucky 40059
502.326.3585 | 502.326.2991 | www.cmta.com

COMMONWEALTH OF KENTUCKY
BRAD PERSON
28424
LICENSED PROFESSIONAL ENGINEER

ELECTRICAL LIGHTING

FiveStar #4460 Hopkinsville
NEWCOMB OIL CO., LLC
3070 PEMBROKE RD.
HOPKINSVILLE, KY 42240

CONSTRUCTION DOCUMENTS

Issue Date:	May, 29 2024
Drawn By:	WTD
Checked By:	DRH
Revisions:	

Mark	Date

AHJ SEAL

Project Number
24010.01

E2.00

PLOT DATE: Friday, June 21, 2024 1:32:08 PM

PARTIAL FLOOR PLAN - LIGHTING

1/4" = 1'-0"

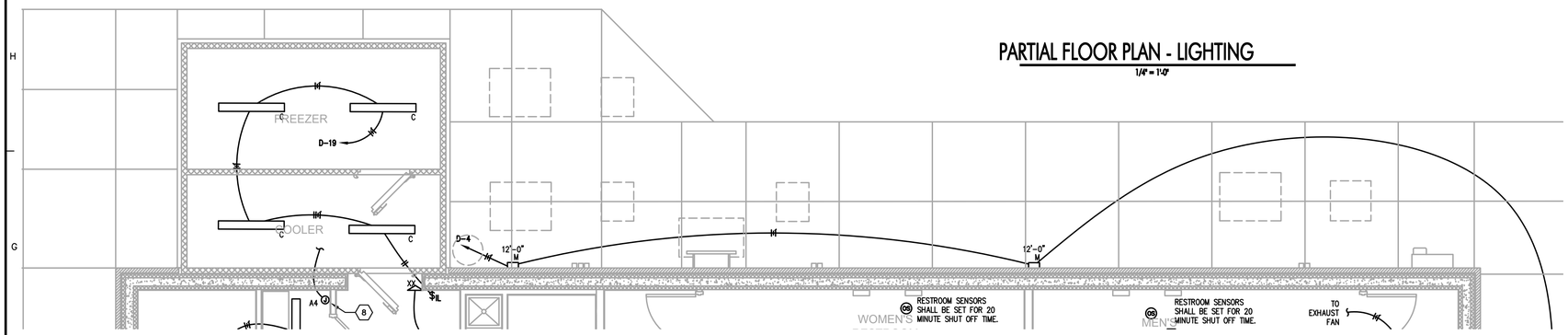

PARTIAL FLOOR PLAN - POWER/SYSTEMS

1/4" = 1'-0"

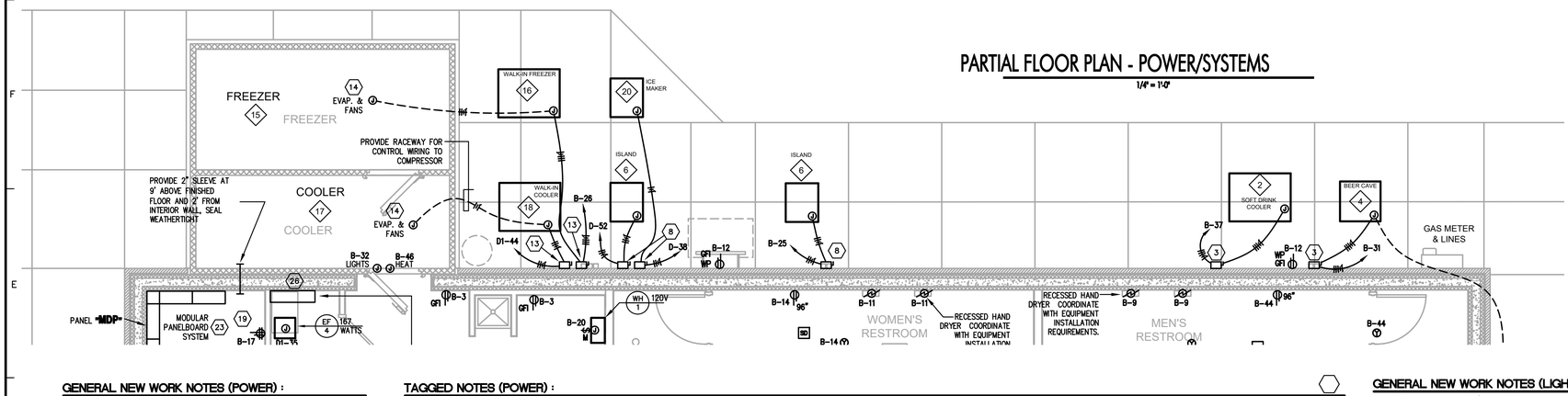

FOOD SERVICE KITCHEN EQUIPMENT SCHEDULE :

ITEM	QTY	DESCRIPTION	ELECTRICAL KW	HP	AMP	VOLT	PH	PLUG	HARD	REMARKS
1	1	SOFT DRINK COOLER EVAPORATOR							●	MULTIPLE ACC.
2	1	SOFT DRINK COOLER COND. UNIT		5.5	27.5	208	3		●	
3	1	BEER CAVE EVAPORATOR							●	MULTIPLE ACC.
4	1	BEER CAVE COND. UNIT		1/3	3.5	208	3		●	
5	2	MULTI-DECK ISLAND MERCHANDISER	0.396		4.3	120	1		●	
6	2	ISLAND COND. UNIT.		1.0	9.0	208	1		●	
9	1	4 WELL HOT FOOD TABLE			27.8	208	1	14-50P		
10	1	HOT FOOD MERCHANDISER	3.34		13.8	120	1	14-20P		
11.1	2	CONVECTION OVEN			1.0	120	1	5-15P		
11.2	2	HOLDING CABINET	2.05		8.5	208	1	6-15P		
12	2	FLOOR MODEL GAS FRYER			12.0	120	1			
13	1	GRIDDLE			1.0	120	1			
14	1	EXHAUST HOOD								
15	1	WALK-IN FREEZER EVAPORATOR							●	MULTIPLE ACC.
16	1	WALK-IN FREEZER COND. UNIT		3.5	12.2	208	3		●	
17	1	WALK-IN COOLER EVAPORATOR							●	MULTIPLE ACC.
18	1	WALK-IN COOLER COND. UNIT		1.0	9.0	208	1		●	
19	2	REMOTE ICE MAKER (ON FOUNTAIN)			18.7	208	1		●	
20	2	ICE MAKER REMOTE CONDENSER			1.7	208	1		●	
21	1	WORKTOP SOLID DOOR FREEZER		1/2	3.2	120	1	5-15P	●	
22	1	FOOD PREP TABLE			2.3	208				
23	2	SODA FOUNTAIN	VERIFY EXACT REQUIREMENTS IN FIELD WITH VENDOR							
24	1	TEA BREWER	VERIFY EXACT REQUIREMENTS IN FIELD WITH VENDOR							
25	1	FREAL BLENDER			15.0	120	1	5-15P		
26	1	FREAL MINI BLENDING BAR			15.0	120	1	5-15P		
27	1	FREEZE MACHINE			18.0	208	1	5-15P		
29	2	MICROWAVE	1.0		13.0	120	1	5-15P		
30	1	INDUCTION RANGE								
31	1	BAKED GOODS								
32	1	DONUT CASE								
34	2	CAPPUCCINO MACHINE			15.0	120	1	5-20P		
36	3	BEAN TO CUP COFFEE			24.0	208	1	6-30P		
37	1	CREAMER			10.0	120	1	5-20P		
38	1	SUGAR			3.0	120	1	5-20P		
43	1	DISHWASHER								
43.1	1	RINSE TABLE - INTEGRAL SINK DISPOSAL		1.0	4.9	208	3			
47	5	POS TERMINALS			2.0	120	1	5-20P		
51	4	SUSPENDED TV MONITORS			2.0	120	1	5-20P		
54	2	HUSSMAN DISPLAY CASE		0.5	9.0	120	1	5-15P		
55	1	FOOD WARMER	1.6		13.3	120	1	5-15P		
56	1	CONVECTION WARMING OVEN	4.7		15.0	208	3	L15-20P		
57	1	ICE CREAM CASE			4.6	120	1	5-15P		
58	1	WORKTOP COOLER			2.0	120	1	5-15P		

* - DEVICES INDICATED WITH ASTERISKS SHALL BE ROUGHED IN WITH WIRE AND CONDUIT BUT PROVIDED WITH BLANK PLATE.

GENERAL NEW WORK NOTES (POWER) :

A. REFER TO THE ARCHITECT'S REFLECTED CEILING PLANS FOR EXACT LOCATIONS OF ALL CEILING MOUNTED LIGHT FIXTURES ETC. REFER ALSO TO THE ARCHITECT'S CASEWORK DETAILS AND ROOM ELEVATIONS FOR EXACT LOCATIONS AND MOUNTING HEIGHTS OF LIGHT FIXTURES, ETC.

B. ALL NEW WIRING SHALL BE #12 WITH A #12 INSULATED GROUND WIRE (U.O.N.). CONDUIT SHALL BE 1/2" MINIMUM.

C. CONTRACTOR SHALL FOLLOW BRANCH CIRCUITING LAY-OUT, AS INDICATED ON THE FLOOR PLANS, WITH A MAXIMUM OF THREE (3) BRANCH CIRCUITS PER HOMERUN. EACH BRANCH CIRCUIT SHALL BE PROVIDED WITH A DEDICATED NEUTRAL CONDUCTOR. DEDICATED NEUTRAL CONDUCTORS SHALL BE CONSIDERED CURRENT CARRYING. IF ADDITIONAL CONDUCTORS ARE RAN IN THE SAME CONDUIT WITH THOSE INDICATED, CONTRACTOR SHALL DERATE ALL CURRENT CARRYING CONDUCTORS PER N.E.C. #310.15(B)(3), AND UPSIZE CONDUIT AS REQUIRED PER N.E.C. #300.17 AND ANNEX C. MULTIWIRE BRANCH CIRCUITS AS DEFINED IN N.E.C #100 / 210.4 (CIRCUITS SHARING A COMMON NEUTRAL CONDUCTOR) SHALL NOT BE PERMITTED.

D. MC CABLING SHALL BE ACCEPTABLE WHERE CONCEALED IN WALLS AND CEILINGS. EMT SHALL BE USED AT ALL EXPOSED LOCATIONS.

E. A DIMENSIONED AND DETAILED AS-BUILT PLAN SHALL BE PROVIDED BY THE CONTRACTOR INDICATING ALL CONDUIT ROUTES. THE CONTRACTOR SHALL TAKE AND PROVIDE PHOTOS OF ALL UNDERGROUND UTILITIES PRIOR TO COVERING OF TRENCHES.

F. ALL UNDERGROUND TRENCHES SHALL BE FILLED WITH STONE.

G. ALL EMPTY CONDUITS FOR FUTURE USE SHALL BE PROVIDED WITH A PULL STRING.

H. ALL DEVICES SHALL BE STAINLESS STEEL, WHITE, BROWN OR IVORY. WHITE AT WHITE AND RED TILE, BROWN AT ALL BROWN TILE AND BY STORE FRONT, IVORY AGAINST ALL PAINTED WALLS, WHITE INSIDE CABINETS AND STAINLESS AT HOOD.

I. ALL CONDUITS STUBBED UP FROM FLOOR SHALL BE SEALED AS REQUIRED FOR GAS SEALS. THIS SHALL APPLY TO ALL CONDUITS WHETHER SERVING GAS EQUIPMENT OR NOT.

J. ALL DISCONNECTS SHALL BE SQUARE D SIDE ARMED AND NON FUSED.

K. ALL RECEPTACLES SHALL BE ON MINIMUM OF 20A CIRCUITS AND SHALL BE 20A RATED DEVICES.

L. PROVIDE 3/4" AND 1" CONDUITS FROM TROUGH IN ELECTRIC ROOM TO 15'-0" BEYOND SIDEWALK AND MINIMUM OF 18" BELOW GRADE. CONDUITS TO HAVE SEAL OFF AT FIRST JOINT ABOVE FLOOR. VERIFY WITH OWNER.

M. POLE LIGHTS AND POLES SHALL BE FURNISHED BY OWNER AND INSTALLED BY ELECTRICAL CONTRACTOR.

N. POLE LIGHTS MARKED WITH AN ASTERISK ON SITE PLAN SHALL HAVE (1) DUPLEX RECEPTACLE FURNISHED AND INSTALLED BY THE ELECTRICAL CONTRACTOR. ALL POLES TO BE WIRED WITH #10 STRANDED WIRE.

O. ALL UNDERGROUND CONDUIT SHALL HAVE GALVANIZED 90'S.

P. PROVIDE AND INSTALL ALL CORDS AND PLUGS FOR FOOD SERVICE EQUIPMENT.

Q. ALL GAS EQUIPMENT AND DISPENSERS MUST BE ON THE SAME PHASE (A OR C).

R. PROVIDE (1) BREAKER FOR EACH LINE LEAK DETECTOR UST.

S. PROVIDE 3/4" CONDUIT TO EACH AIR STAND AS SHOWN ON THE SITE DRAWINGS. REFER TO PANEL SCHEDULES FOR CIRCUIT NUMBERS. PROVIDE #10 WIRING TO EACH LOCATION. COORDIANTE TERMINATION OF 30A CIRCUIT AND 20A CIRCUIT WITH CORRECT DEVICE ON SITE.

TAGGED NOTES (POWER) :

1. PROVIDE EMERGENCY KILL SWITCH, ROUGH-IN AND STUB OUT ON EXTERIOR OF BUILDING FOR EMERGENCY PUMP SHUT DOWN. PROVIDE ADDITIONAL SINGLE GANG BOX BELOW FOR SPEAKER. ROUGH-INS SHALL BE CENTERED ABOUT BRICK. PROVIDE CONNECTION TO GAS PUMP PANEL SHUNT TRIP CONTROL AS REQUIRED. ROUGH-INS SHALL BE ON SIDE OF BUILDING FACING PUMP ISLAND. COORDINATE EXACT LOCATION FACING FILLING AREA WITH PUMP INSTALLER. COORDINATE PRIOR TO START OF CONSTRUCTION FOR UNDERGROUND ROUTING REQUIREMENTS.
2. ALL RECEPTACLES AND DEVICES AT THE CHECK OUT COUNTER SHALL BE MOUNTED HIGH IN THE BACK OF CASEWORK. COORDINATE EXACT MOUNTING LOCATION WITH ALL TRADES PRIOR TO ROUGH-IN. REFER TO ARCHITECTURAL ELEVATIONS.
3. PROVIDE 60A/250V/3P DISCONNECT IN NEMA-3R ENCLOSURE. PROVIDE ALL MOUNTING EQUIPMENT AS REQUIRED FOR MOUNTING ON WALL/ROOF. COORDINATE EXACT MOUNTING LOCATION WITH ALL TRADES PRIOR TO ROUGH-IN.
4. PROVIDE DISCONNECT FOR ICE CHEST AT 60" ABOVE GRADE. DISCONNECT SHALL BE PAINTED TO MATCH STOREFRONT.
5. PROVIDE LINE VOLTAGE CONNECTIONS TO WALK-IN COOLER THERMOSTATS AND ACCESSORIES AS REQUIRED.
6. CIRCUIT INDICATED SHALL BE CONTROLLED BY A SHUNT TRIP BREAKER AS REQUIRED FOR TYPE 1 EXHAUST HOOD. SHUNT TRIP SHALL BE CONTROLLED BY HOOD SHUT DOWN EQUIPMENT AS REQUIRED. COORDINATE WITH HOOD INSTALLER.
7. PROVIDE 60A/250V/3P DISCONNECT IN NEMA-3R ENCLOSURE. PROVIDE ALL MOUNTING EQUIPMENT AS REQUIRED FOR MOUNTING ON WALL/ROOF. COORDINATE EXACT MOUNTING LOCATION WITH ALL TRADES PRIOR TO ROUGH-IN.
8. PROVIDE 30A/250V/2P DISCONNECT IN NEMA-3R ENCLOSURE. PROVIDE ALL MOUNTING EQUIPMENT AS REQUIRED FOR MOUNTING ON WALL. COORDINATE EXACT MOUNTING LOCATION WITH ALL TRADES PRIOR TO ROUGH-IN. PROVIDE POWER CONNECTION FROM FOUNTAIN ICE MACHINES AS REQUIRED. COORDINATE FURTHER REQUIREMENTS WITH EQUIPMENT INSTALLER.
9. PROVIDE 120V CONNECTION TO GAS SOLENOID FOR SHUTDOWN OF HOOD EQUIPMENT GAS CONNECTIONS WITH SHUNT TRIP. COORDINATE EXACT LOCATION AND CONNECTION REQUIREMENTS WITH GAS INSTALLER.
10. PROVIDE RACEWAY TO MAKE UP AND EXHAUST FAN CONTROL SWITCH AS REQUIRED. COORDINATE EXACT REQUIREMENTS WITH HOOD INSTALLER.
11. INSTALL A LOWES 56" DIAMETER CEILING HUGGER CEILING FAN. FAN SHALL BE ALL WHITE. PROVIDE VARIABLE SPEED CONTROLLERS (LUTRON FSE-FE OR EQUAL) AT LOCATION INDICATED IN STORAGE ROOM.
12. NETWORK SWICHES AND PATCH PANELS SHALL BE PROVIDED BY OWNER AND LOCATED IN ELECTRICAL ROOM AS INDICATED. UNLESS OTHERWISE NOTED, PROVIDE SHIELDED, CAT 6 NETWORK CABLING FROM PHONE AND DATA DROPS INDICATED ON PLANS BACK TO THIS LOCATION. TERMINATE AND LABEL CABLING PER OWNER REQUIREMENTS. PROVIDE TELECOM UTILITY RACEWAYS FROM SITE TO RACK LOCATION. PROVIDE DEDICATED UTILITY SERVICE CONDUIT FOR LOTTERY PHONE LINE. COORDINATE EXACT REQUIREMENTS WITH OWNER AND SITE CONTRACTOR PRIOR TO ROUGH-IN. NETWORK AND VOICE CABLING SHALL BE CONTINUOUS AND SHALL NOT BE SPLICED
13. PROVIDE 30A/250V/3P DISCONNECT IN NEMA-3R ENCLOSURE. PROVIDE ALL MOUNTING EQUIPMENT AS REQUIRED FOR MOUNTING ON WALL/ROOF. COORDINATE EXACT MOUNTING LOCATION WITH ALL TRADES PRIOR TO ROUGH-IN.
14. PROVIDE CONNECTIONS TO ALL THERMOSTATS, DEFROST HEATERS AND EVAPORATOR FANS FROM CONDENSING UNIT CIRCUIT AS INDICATED. COORDINATE EXACT CONNECTION REQUIREMENTS WITH EQUIPMENT INSTALLER. PROVIDE LOCAL DISCONNECT MEANS IN COOLER IF NOT PROVIDED BY INSTALLER.
15. PROVIDE 120V CONNECTION TO REFRIGERATED CASE THERMOSTAT FROM CIRCUIT SERVING EXTERIOR CONDENSING UNIT. COORDINATE EXACT REQUIREMENTS WITH EQUIPMENT INSTALLER.
16. PROVIDE UNDERSLAB CONDUITS FOR CHECKOUT COUNTER STUBBED UP IN LOCATION INDICATED. PROVIDE (1) 1" CONDUIT TO CLOSET IN OFFICE, (1) 1" CONDUIT TO ELECTRIC ROOM FOR FUTURE POWER, (2) 2" CONDUITS TO COMM ROOM AND STUB UP ALL 120V CIRCUITS IN THIS SPACE.
17. PROVIDE 2" CONDUIT ABOVE CEILING FROM THE 12"X12"X4" DEEP JUNCTION BOX WITH FRONT ACCESS. PROVIDE 1" CONDUIT FROM BOX BELOW SLAB TO CHECKOUT COUNTER. BOX SHALL BE MOUNTED AT 12" A.F.F. FROM BOTTOM OF BOX.
18. PROVIDE INTERIOR EMERGENCY KILL SWITCH FOR EMERGENCY PUMP SHUT DOWN AT CASHIER LOCATION AS INDICATED IN ELEVATIONS. PROVIDE CONNECTION TO GAS PUMP PANEL SHUNT TRIP CONTROL AS REQUIRED.
19. PROVIDE WEATHERHEADS WHERE REQUIRED FOR TELEPHONE ENTRY AND OVERHEAD SECONDARY ELECTRICAL SERVICE WHERE REQUIRED BY UTILITY COMPANY. COORDINATE INSTALLATION WITH ALL TRADES AND WEATHER-SEAL TO MAINTAIN ROOF AND WALLS AS REQUIRED.
20. PROVIDE DUAL 8" X 8" X 5' ELECTRICAL TROUGHS IN ELECTRICAL ROOM FOR GAS PUMP EQUIPMENT WIRING. THE TOP TROUGH SHALL BE USED FOR LINE VOLTAGE CABLING AND THE BOTTOM TROUGH SHALL BE USED FOR LOW VOLTAGE CABLING. TROUGHS SHALL BE OFFSET FROM EACH OTHER TO ALLOW ACCESS TO EACH TROUGH.
21. ALL RECEPTACLES ALONG COUNTER INDICATED SHALL BE INSTALLED COMPLETELY TO THE BACK OF THE COUNTER AND SHALL BE COORDINATED WITH ARCHITECTURAL ELEVATIONS.
22. PROVIDE 3/4" CONDUIT DOWN TO SINGLE GANG BOX FOR ALARM SYSTEM BOX.
23. ALL CONDUIT PENETRATIONS THROUGH THE FLOOR SLAB SHALL BE PROVIDED WITH AIR TIGHT SEALS WHETHER SERVING GAS EQUIPMENT OR NOT.
24. PROVIDE EMPTY 3" CONDUIT WITH PULL STRING UNDERSLAB FROM ELECTRIC ROOM TO LOCATION INDICATED.
25. PROVIDE RANGE HOOD EMERGENCY PULL CORD AT 60" ABOVE FINISHED FLOOR AT LOCATION INDICATED. REFER TO DETAIL AND COORDINATE WITH HOOD INSTALLER.
26. PROVIDE A 1" CONDUIT FROM COMM ROOM TO EACH CANOPY ON SITE FOR CAMERA CABLING.
27. PROVIDE FLOOR MOUNTED 12" X 12" X 4" DEEP BOX AGAINST FRONT OF CABINET WITH EMPTY 3" CONDUIT WITH PULL STRING UNDERSLAB FROM ELECTRIC ROOM TO LOCATION INDICATED.
28. PROVIDE 60A/250V/3P DISCONNECT IN NEMA-1 ENCLOSURE. COORDINATE EXACT MOUNTING LOCATION WITH ALL TRADES PRIOR TO ROUGH-IN.
29. PROVIDE 30A/250V/3P DISCONNECT IN NEMA-1 ENCLOSURE. COORDINATE EXACT MOUNTING LOCATION WITH ALL TRADES PRIOR TO ROUGH-IN.
30. PROVIDE SINGLE GANG ROUGH-IN FOR SECURITY CAMERA FACING GAS CANOPY. PROVIDE 3/4" CONDUIT FROM BOX TO LOW VOLTAGE BOX ON INTERIOR SIDE OF WALL NEAR FLOOR. COORDINATE GAS CANOPY LOCATION WITH GENERAL CONTRACTOR AND INSTALL ON SIDE FACING CANOPY. MOUNT CENTERED ABOUT BRICK HORIZONTALLY AND VERTICALLY CENTERED ABOUT CLEARSTORY OPENING.
31. PROVIDE A TOTAL OF (4) 1" UNDERSLAB ELECTRICAL CONDUITS FOR WIRING FROM ELECTRICAL CLOSET. (1) CONDUIT SHALL BE SPARE AND PROVIDED WITH A PULL STRING. STUB UP AT LOCATION INDICATED ON ARCHITECTURAL DIMENSION PLAN.
32. PROVIDE EMPTY 3" CONDUIT WITH PULL STRING UNDERSLAB FROM ELECTRIC ROOM TO LOCATION INDICATED.

GENERAL NEW WORK NOTES (LIGHTING):

A. REFER TO THE ARCHITECT'S REFLECTED CEILING PLANS FOR EXACT LOCATIONS OF ALL CEILING MOUNTED LIGHT FIXTURES ETC. REFER ALSO TO THE ARCHITECT'S CASEWORK DETAILS AND ROOM ELEVATIONS FOR EXACT LOCATIONS AND MOUNTING HEIGHTS OF LIGHT FIXTURES, ETC.

B. ALL NEW WIRING SHALL BE #12 WITH A #12 INSULATED GROUND WIRE (U.O.N.). CONDUIT SHALL BE 3/4" MINIMUM.

C. CONTRACTOR SHALL FOLLOW BRANCH CIRCUITING LAY-OUT, AS INDICATED ON THE FLOOR PLANS, WITH A MAXIMUM OF THREE (3) BRANCH CIRCUITS PER HOMERUN. EACH BRANCH CIRCUIT SHALL BE PROVIDED WITH A DEDICATED NEUTRAL CONDUCTOR. DEDICATED NEUTRAL CONDUCTORS SHALL BE CONSIDERED CURRENT CARRYING. IF ADDITIONAL CONDUCTORS ARE RAN IN THE SAME CONDUIT WITH THOSE INDICATED, CONTRACTOR SHALL DERATE ALL CURRENT CARRYING CONDUCTORS PER N.E.C. #310.15(B)(3), AND UPSIZE CONDUIT AS REQUIRED PER N.E.C. #300.17 AND ANNEX C. MULTIWIRE BRANCH CIRCUITS AS DEFINED IN N.E.C #100 / 210.4 (CIRCUITS SHARING A COMMON NEUTRAL CONDUCTOR) SHALL NOT BE PERMITTED.

D. ALL UNDERGROUND TRENCHES SHALL BE FILLED WITH STONE.

E. MC CABLING SHALL BE ACCEPTABLE WHERE CONCEALED IN WALLS AND CEILINGS. EMT SHALL BE USED AT ALL EXPOSED LOCATIONS.

F. A DIMENSIONED AND DETAILED AS-BUILT PLAN SHALL BE PROVIDED BY THE CONTRACTOR INDICATING ALL CONDUIT ROUTES. THE CONTRACTOR SHALL TAKE AND PROVIDE PHOTOS OF ALL UNDERGROUND UTILITIES PRIOR TO COVERING OF TRENCHES.

G. ALL EMPTY CONDUITS FOR FUTURE USE SHALL BE PROVIDED WITH A PULL STRING.

H. ALL CONDUITS STUBBED UP FROM FLOOR INTO WIRING TROUGH SHALL BE SEALED AS REQUIRED FOR GAS SEALS. THIS SHALL APPLY TO ALL CONDUITS IN THE TROUGH WHETHER SERVING GAS EQUIPMENT OR NOT.

I. ALL SWITCHES SHALL BE MOUNTED AS TIGHT TO DOOR FRAMES AS POSSIBLE TO MAXIMIZE AVAILABLE WALL SPACE. PROVIDE MULTIGANG SWITCHBOXES WHEREVER POSSIBLE. NO SWITCHES SHALL BE MOUNTED ANY MORE THAN 12" FROM DOOR FRAME.

TAGGED NOTES (LIGHTING) :

1. DECORATIVE GRAPHICS LIGHTING J-BOX. ROUTE ALL CONDUIT AND WIRING CONCEALED TO SIGNAGE. PROVIDE BOX IN VERTICAL FACE OF SOFFIT AS REQUIRED. CONNECTION SHALL BE CENTERED OVER SHELVING AND LOCATED 9" ABOVE THE TOP OF THE OPENING. CONTROL WITH INTERIOR LIGHTING. PROVIDE WITH 14-1/2" WIDE X 6" TALL X 4" DEEP JUNCTION BOX ACCESSIBLE FROM THE MANAGER'S OFFICE WITH ONE CIRCUIT AND NIPPLE OUT THE BACKSIDE TO FEED SIGN. MOUNT 8-1/2" ABOVE FINISHED OPENING CENTERED OVER SHELVING. COORDINATE EXACT ELEVATION WITH ALL TRADES PRIOR TO ROUGH-IN.
2. EXTERIOR LIGHTING CIRCUIT SHALL BE CONTROLLED THROUGH EXTERIOR LIGHTING PHOTOCELL AS REQUIRED. PROVIDE UNSWITCHED CONDUCTOR BYPASSING PHOTOCELL FOR CONNECTION TO BATTERY BACK UP "EB" DEVICES IN OFFICE 103..
3. FREEZER VAPOR PROOF LIGHT PROVIDED WITH COOLER SHALL NOT BE CONNECTED.
4. PROVIDE SWITCH AT LOCATION INDICATED FOR OVERRIDE OF OCCUPANCY SENSOR IN ROOM. SWITCH SHALL PROVIDE BYPASS OF OCCUPANCY SENSOR RELAY AS REQUIRED FOR OVERRIDE.
5. PROVIDE CONNECTIONS TO SITE LIGHTING POLES AS REQUIRED BY SITE PLAN. PROVIDE ADDITIONAL CIRCUIT TO EACH LIGHTING POLE MARKED WITH AN ASTERISK FOR BASE MOUNTED RECEPTACLE. RECEPTACLE SHALL BE MOUNTED ON POLE BASE AND NOT AT POLE ACCESS BOX. REFER TO SITE SPECIFIC DRAWINGS FOR FURTHER REQUIREMENTS.
6. REFER TO SITE SPECIFIC PLANS FOR EXACT SIGN LOCATIONS AND REQUIREMENTS. SITE SIGNAGE SHALL BE WIRED IN THE FOLLOWING MANNER:
   - 6.A. (2) 1" CONDUITS FROM THE ELECTRICAL ROOM TO EACH SIGN. DO NOT LOOP CONDUITS FROM ON SIGN TO ANOTHER,
   - 6.B. ON THE POLE SIGN, PROVIDE (2) 3/4" CONDUITS THAT LOOP FROM ONE LEG OF THE SIGN TO THE OTHER LEG OF THE SIGN.
   - 6.C. ONE CONDUIT TO EACH SIGN SHALL HAVE (3) 120V 20 AMP CIRCUITS WITH #10 CONDUCTORS AND GROUND FOR EACH CIRCUIT. (2) CIRCUITS SHALL ALWAYS BE HOT AND ONE SHALL BE SWITCHED WITH THE EXTERIOR LIGHTING PHOTOCELL.
   - 6.D. ONE CONDUIT TO EACH SIGN IS FOR FUTURE LOW VOLTAGE USE. THIS CONDUIT SHALL NOT BE LOOPED BETWEEN SIGNS.
   - 6.E. THE SIGN CONDUIT SHALL NOT BE COMBINED WITH AREA LIGHTING. ALL AREA LIGHTS SHALL BE FEED THROUGH SEPARATE CONDUITS.
   - 6.F. ALL BUILDING SIGNS SHALL BE INSTALLED BY THE ELECTRICAL CONTRACTOR.
7. PROVIDE PERMANENT LABELS ON SWITCHES TO INDICATE LOAD SERVED.
8. PROVIDE 2" CONDUIT FROM NEW SATELLITE LOCATION TO ELECTRIC ROOM. SATELLITE WILL NEED TO BE LOCATED TO A NON CANOPY LOCATION OUT THE BACK OF THE STORE FACING SOUTH EAST.
9. PROVIDE 1" CONDUIT FROM CLOSET TO ALL SITE CANOPIES FOR SURVEILLANCE CAMERAS. COORDINATE EXACT REQUIREMENTS WITH SITE PLANS.
10. PROVIDE 2" CONDUIT FROM OFFICE CLOSET TO 12" ABOVE ATTIC INSULATION.
11. PROVIDE SWITCHES WITH PERMANENT LABELS INDICATING FUNCTION FOR THE FOLLOWING ITEMS:
    - 11.A. INTERIOR LIGHTING SWITCH: INTERIOR LIGHTING CIRCUITS SHALL BE ROUTED THROUGH INTERIOR LIGHTING CONTACTOR FOR CONTROL OF ALL INTERIOR ZONE.
    - 11.B. EXTERIOR LIGHTING SWITCH: SHALL OVERRIDE EXTERIOR LIGHTING CONTACTOR.
    - 11.C. FAN SPEED CONTROL SWITCH.

CMW The Shape of Ideas
Architecture
Civil Engineering
Landscape Architecture
a: 249 East Main Street
Suite 100
Lexington, Kentucky 40507
o: (859) 254-6623
w: www.cmwec.com

CMTA
10411 Meeting Street Prospect, Kentucky 40059
502.365.3683 f.502.228.2891 www.cmta.com

COMMONWEALTH OF KENTUCKY BRAD PERSON 28422 LICENSED PROFESSIONAL ENGINEER

ELECTRICAL PLANS

FiveStar #4460 Hopkinsville
NEWCOMB OIL CO., LLC
3070 PEMBROKE RD.
HOPKINSVILLE, KY 42240

CONSTRUCTION DOCUMENTS

Issue Date:	May, 29 2024
Drawn By:	WTD
Checked By:	DRH
Revisions:	
Mark	Date

AHJ SEAL

Project Number
24010.01

E-2.01

PLOT DATE: Friday, June 21, 2024 1:28:01 PM

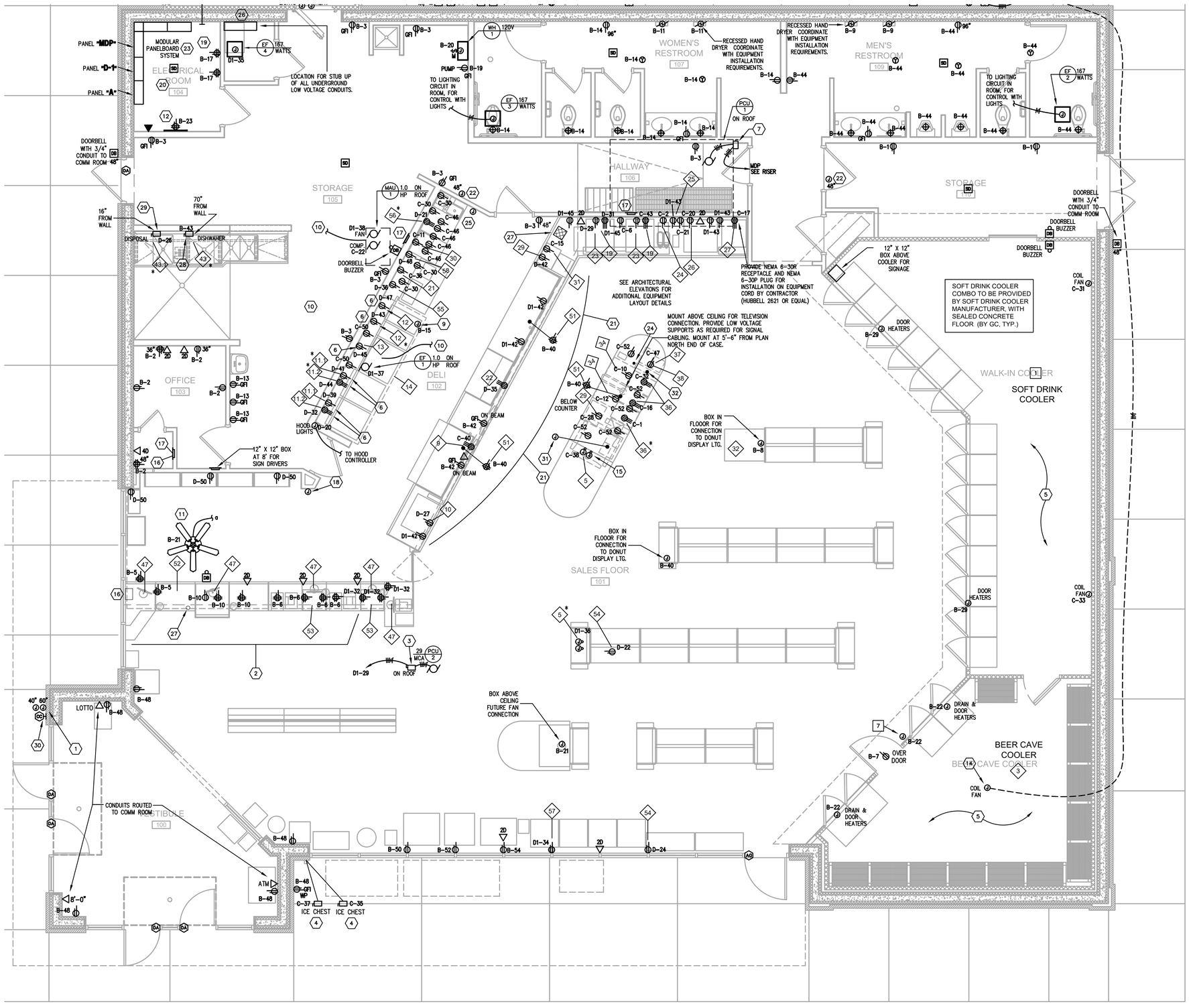

PARTIAL ELECTRICAL - POWER/SYSTEMS

1/4" = 1'-0"

CMW
The Shape of Ideas

Architecture
Civil Engineering
Landscape Architecture
a: 249 East Main Street
Suite 100
Lexington, Kentucky 40507
o: (859) 254-6623
w: www.cmwaec.com

CMTA
15411 Meeting Street, Prospect, Kentucky 40059
502.326.3585 | 502.326.2991 | www.cmta.com

COMMONWEALTH OF KENTUCKY
BRAD PERSON
28424
LICENSED PROFESSIONAL ENGINEER
STATE OF KENTUCKY

ELECTRICAL POWER/SYSTEMS

FiveStar #4460 Hopkinsville
NEWCOMB OIL CO., LLC
3070 PEMBROKE RD.
HOPKINSVILLE, KY 42240

CONSTRUCTION DOCUMENTS

Issue Date:	May, 29 2024
Drawn By:	WTD
Checked By:	DRH
Revisions:	

Mark	Date

AHJ SEAL

Project Number
24010.01

E-3.00

PLOT DATE: Friday, June 21, 2024 1:38:21 PM

PANELBOARD AND WIRING SCHEDULE - (Double Tub, Double Trim)

PANELBOARD: A | **AMPERES:** 100 | **VOLTAGE:** 120/208 | **PHASE:** 1 | **WIRE:** 3 | **MANUF.:** SQUARE D | **TYPE:** MODULAR

GND	CON	LOAD A	LOAD B	LOAD C	DESIGNATION	WIRE	BKR	CKT	CKT	BKR	WIRE	DESIGNATION	LOAD A	LOAD B	LOAD C	CON	GND
12	3/4"	1.4			DISP 1+2	12	15/2	1	2	15/2	12	UNL STP	1.1			3/4"	12
12	3/4"			1.4	DISP 3+4	12	15/2	3	4	---	---	----------			1.1	---	---
12	3/4"	1.4			DISP 5+6	12	15/2	5	6	15/2	12	SUPER STP	1.1			3/4"	12
12	3/4"			1.4	DISP 7+8	12	15/2	7	8	---	---	----------			1.1	---	---
12	3/4"	1.4			DISP 9+10	12	15/2	9	10	15/2	12	DIESEL STP	1.1			3/4"	12
12	3/4"			1.4	DISP 11+12	12	15/2	11	12	---	---	----------			1.1	---	---
12	3/4"	1.4			DISP 13+14	12	15/2	13	14	15/2	12	K-1 STP	0.7			3/4"	12
12	3/4"			1.4	DISP 15+16	12	15/2	15	16	---	---	----------			0.7	---	---
12	3/4"	1.4			DISP 17+18	12	15/2	17	18	15/2	12	DEF STP	0.8			3/4"	12
12	3/4"			0.6	GAS CANOPY LIGHTS	12	15/1	19	20	---	---	----------			0.8	---	---
12	3/4"	0.6			GAS CANOPY LIGHTS	12	15/1	21	22	15/1	12	DIESEL CANOPY LIGHTS	0.6			3/4"	12
12	3/4"			0.6	GAS CANOPY LIGHTS	12	15/1	23	24	15/1	12	DIESEL CANOPY SIGN			1.0	3/4"	12
12	3/4"	1.0			GAS CANOPY SIGN	12	15/1	25	26	20/2		SPARE					
					----------		---	27	28	---		----------					
					SPARE SWITCHED NEUTRAL		15/2	29	30	20/2		SPARE					
					----------		---	31	32	---		----------					
					SPARE SWITCHED NEUTRAL		15/2	33	34	20/2		SPARE					
					----------		---	35	36	---		----------					
					SPARE SWITCHED NEUTRAL		15/2	37	38	20/2		SPARE					
					----------		---	39	40	---		----------					
					SPACE			41	42	15/1	12	OUTLET FOR D-BOX	1.0			3/4"	12
					SPACE			43	44	15/1		SPARE					
					SPACE			45	46	15/1		SPARE					
					SPACE			47	48	20/1		SPARE					
					SPACE			49	50	20/1		SPACE					
					SPACE			51	52	20/1		SPACE					
		10.0		8.2	**SUB-TOTAL** KVA							KVA **SUB-TOTAL**	6.4		5.8		
												KVA **GROSS-TOTAL**	16.4		14		30.40

EMERGENCY POWER: **NO** | MAIN BREAKER: | BRANCH: | MAIN LUGS: **YES** | A.I.C. RATING: 35,000

TYPICAL EQUIPMENT NAMEPLATE DETAIL

NO SCALE

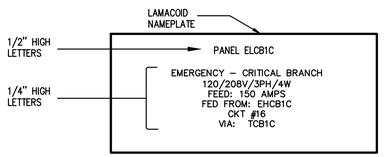

GENERAL NOTES :

A. NORMAL POWER PANELS SHALL HAVE BLACK BACKGROUND WITH WHITE LETTERS. EMERGENCY PANELS SHALL HAVE RED BACKGROUND WITH WHITE LETTERS.

B. UTILIZE SELF ADHESIVE TYPE LAMACOID PLATE FOR ALL AREAS, EXCEPT UTILIZE SCREW-ON TYPE IN ALL MECHANICAL ROOMS.

AUTOMATIC LIGHTING CONTROL SCHEMATIC

NO SCALE

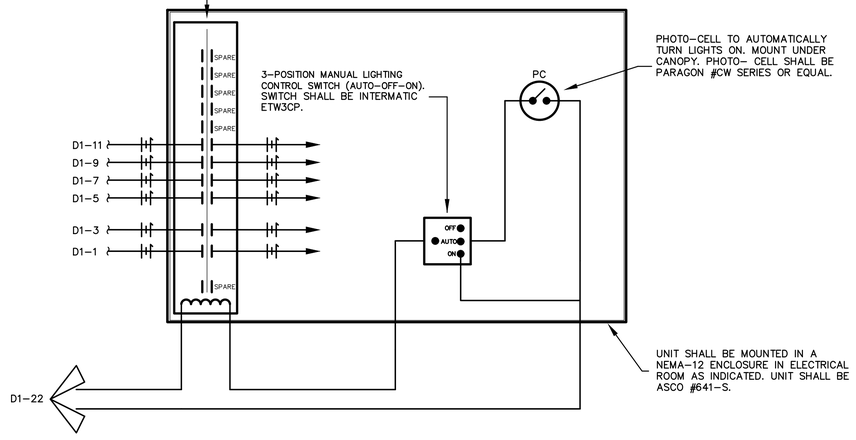

TAGGED NOTES :

1. PROVIDE SQUARE "D" INTEGRATED POWER CENTER DISTRIBUTION SYSTEM AS SHOWN. MAIN DISTRIBUTION EQUIPMENT SHALL BE 1000A/120/208V/3PH/4W AND SHALL BE MAIN SERVICE RATED. PROVIDE WITH I-LINE STYLE MAIN DISTRIBUTION WITH MAIN SERVICE RATED BREAKERS FEEDING LOADS AS INDICATED ON RISER AND FLOOR PLANS. PROVIDE WITH MODULAR PANELBOARDS AND CONTACTORS AS INDICATED ON RISER AND FLOORPLANS FOR BRANCH CIRCUIT DISTRIBUTION AND CONTROL. ALL OVERCURRENT DEVICES IN MAIN PANEL AND ASSOCIATED MODULAR EQUIPMENT SHALL HAVE A RATING AT A MINIMUM OF 35 KAIC SHORT CIRCUIT RATINGS. PROVIDE A SURGE SUPPRESSION DEVICE "SPD" AT THE MAIN DISTRIBUTION PANEL AS WELL AS EACH BRANCH PANEL.
2. PANEL "A" AND ASSOCIATED FUEL CONTACTOR SHALL BE DEDICATED FOR FUEL DISTRIBUTION EQUIPMENT. COORDINATE EXACT BRANCH CIRCUIT OVERCURRENT REQUIREMENTS WITH FUEL SERVICE PLANS AND CONTRACTOR. PROVIDE A STUBOUTS AS REQUIRED FOR BRANCH CIRCUITS AND CONTROLS. PROVIDE SEALS AT RACEWAY OPENINGS AS REQUIRED FOR SERVING FUEL DISTRIBUTION EQUIPMENT.
3. PROVIDE PANEL "D-1" AND ASSOCIATED CONTACTOR AS REQUIRED FOR EXTERIOR LIGHTING CONNECTIONS AND CONTROL. REFER TO FLOORPLANS AND SCHEDULES FOR FURTHER REQUIREMENTS. COORDINATE EXACT CONTROL REQUIREMENTS WITH KITCHEN HOOD SHOP DRAWINGS AND INSTALLER.

POWER RISER FEEDER SCHEDULE :

A. PROVIDE 3 PARALLEL RUNS OF 4 #400 Kcmil IN 3" CONDUITS.

B. PROVIDE (3) #3 + (1) #8 GROUND IN 1-1/4" CONDUIT.

C. INTEGRATED PANEL FEEDERS SHALL BE FACTORY INSTALLED TYPE THHN POWER CABLES AND SHALL BE SIZED PER NEC CHAPTER 310. WHERE EQUIPMENT MUST BE DISASSEMBLED FOR SHIPPING THE CONTRACTOR SHALL TERMINATE FACTORY PROVIDED CABLES AS REQUIRED UPON REASSEMBLY. COORDINATE ALL REQUIREMENTS WITH MANUFACTURER.

D. PROVIDE (3) #8 + (1) #10 GROUND IN 3/4" CONDUIT.

GENERAL POWER RISER NOTES :

A. REFER TO DETAIL FOR TYPICAL PANEL LABELING REQUIREMENTS.

B. ALL "I-LINE" PANELS SHALL BE AS SCHEDULED ON THIS RISER (EXCEPT WHERE INDICATED, THE CONTRACTOR SHALL REFER TO THE PANELBOARD SCHEDULES FOR COMPLETE BREAKER SCHEDULE).

C. SERVICE EQUIPMENT SHALL BE MARKED WITH THE MAXIMUM AVAILABLE FAULT-CURRENT AT THE EQUIPMENT. APPLY A TYPE-WRITTEN ADHESIVE LABEL WITH WHITE BACKGROUND, 1/2" HIGH BLACK LETTERING.

D. AS PART OF THIS CONTRACT, PROVIDE A COMPREHENSIVE ARC FLASH HAZARD ANALYSIS FOR POWER DISTRIBUTION DEVICES ON THIS PROJECT AS REQUIRED TO MEET REQUIREMENTS OF NFPA 110. PROVIDE ALL LABELS, WARNING SIGNAGE, ETC. PER NFPA-70E AND OSHA REQUIREMENTS.

POWER DISTRIBUTION RISER DIAGRAM

NO SCALE

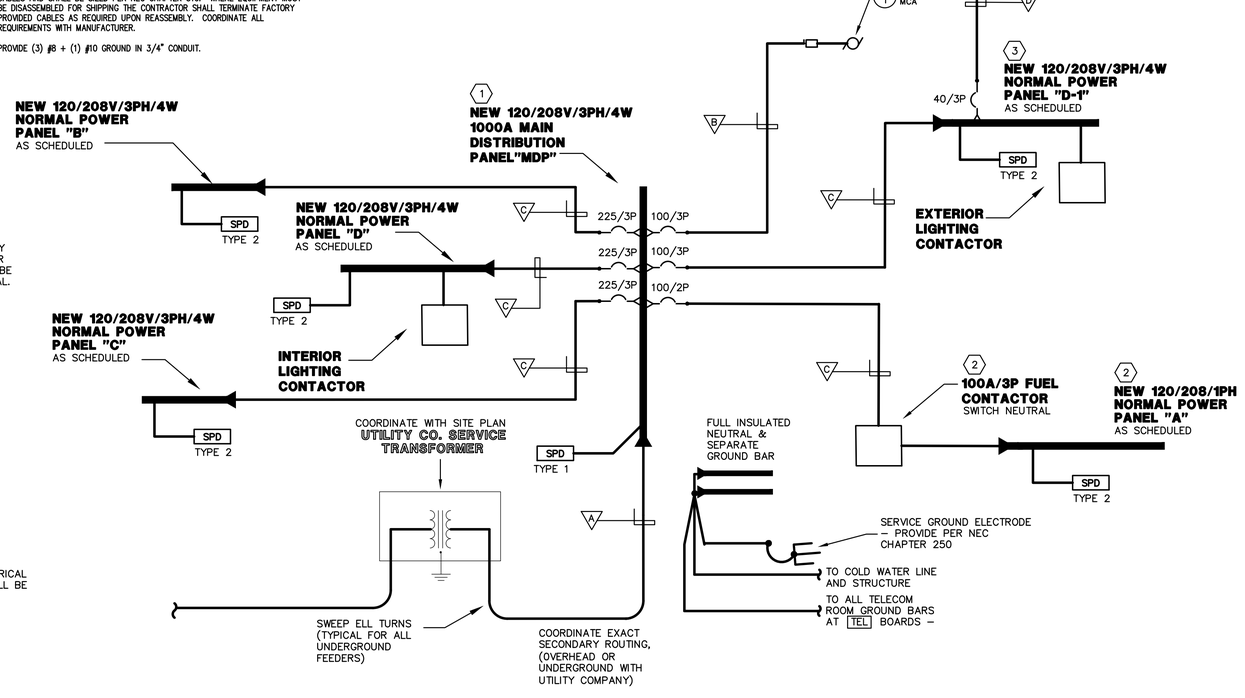

CMW The Shape of Ideas

Architecture
Civil Engineering
Landscape Architecture
a: 249 East Main Street
Suite 100
Lexington, Kentucky 40507
o: (859) 254-6623
w: www.cmwaec.com

CMTA
10411 Meeting Street, Prospect, Kentucky 40059
502.326.3585 1.502.326.2991 www.cmta.com

COMMONWEALTH OF KENTUCKY BRAD HENSLEY 28424 LICENSED PROFESSIONAL ENGINEER

ELECTRICAL RISER AND SCHEDULES

FiveStar #4460 Hopkinsville
NEWCOMB OIL CO., LLC
3070 PEMBROKE RD.
HOPKINSVILLE, KY 42240

CONSTRUCTION DOCUMENTS

Issue Date:	May, 29 2024
Drawn By:	WTD
Checked By:	DRH
Revisions:	

Mark	Date

AHJ SEAL

Project Number
24010.01

E-4.00

PLOT DATE: Friday, June 21, 2024 1:28:57 PM

PANELBOARD AND WIRING SCHEDULE

PANELBOARD: **B** | AMPERES: 225 | VOLTAGE: 120/208 | PHASE: 3 | WIRE: 4 | MANUF.: SQUARE D | TYPE: MODULAR

GND	CON	LOAD A	LOAD B	LOAD C	DESIGNATION	WIRE	BKR	CKT	CKT	BKR	WIRE	DESIGNATION	LOAD A	LOAD B	LOAD C	CON	GND
12	3/4"	0.4			STORAGE - RCP	12	GFI	1	2	20/1	12	OFFICE - RCP	1.2			3/4"	12
12	3/4"		0.7		STORAGE - RCP	12	20/1	3	4	20/1	12	CASH REGISTER - RCP		0.6		3/4"	12
12	3/4"			0.7	CASH REGISTER - RCP	12	20/1	5	6	20/1	12	CASH REGISTER - RCP			0.8	3/4"	12
12	3/4"	0.2			BEER CAVE DOOR - RCP	12	20/1	7	8	20/1	12	DONUT CASE	0.2			3/4"	12
12	3/4"		1.0		HAND DRYER - MENS	12	GFI	9	10	20/1	12	LOTTERY		0.4		3/4"	12
12	3/4"			1.0	HAND DRYER - WOMENS	12	GFI	11	12	GFI	12	EXTERIOR RECEPTACLES - REAR			0.4	3/4"	12
12	3/4"	0.8			STORAGE - RCP	12	20/1	13	14	GFI	12	WOMEN'S RESTROOM - RCP	0.7			3/4"	12
12	3/4"		0.0		HOOD GAS SOLENOID (SHUNT T.)	12	20/1	15	16	20/2	12	FOUNTAIN ICE MACHINE		1.2		3/4"	12
12	3/4"			0.7	ELEC ROOM - RCP	12	20/1	17	18	---	---	----------			1.2	---	---
12	3/4"	0.4			JOCKEY PUMP	12	20/1	19	20	20/1	12	WH-1	1.0			3/4"	12
12	3/4"		0.9		CEILING FANS	12	20/1	21	22	20/1	12	BEER CAVE DOOR HEATERS		1.0		3/4"	12
12	3/4"			0.4	TELECOM - RCP	12	20/1	23	24	20/1	12	STORE - RCP			1.0	3/4"	12
12	3/4"	1.2			DELI CASE - COMPRESSOR	12	20/2	25	26	40/3	8	WALK-IN FREEZER - COMP.	4.5			3/4"	10
---	---		1.2		----------	---	---	27	28	---	---	----------		4.5		---	---
12	3/4"			1.0	SOFT DRINK DOOR HEATERS	12	20/1	29	30	---	---	----------			4.5	---	---
10	3/4"	3.2			BEER CAVE COMPRESSOR	8	40/3	31	32	20/1	12	WALK-IN FREEZER - LIGHTS	0.5			3/4"	12
---	---		3.2		----------	---	---	33	34	20/1	12	COUNTER - RCP		0.6		3/4"	12
---	---			3.2	----------	---	---	35	36	20/2	12	FOUNTAIN ICE MACHINE			1.2	3/4"	12
10	3/4"	3.2			WALK-IN BEV. COOLER COMP.	8	40/3	37	38	---	---	----------	1.2			---	---
---	---		3.2		----------	---	---	39	40	20/1	12	FOUNTAIN SIGNS		0.1		3/4"	12
---	---			3.2	----------	---	---	41	42	20/1	12	COFFEE TV'S			0.4	3/4"	12
10	1"				FUT. DISHWASHER	6	60/3	43	44	20/1	12	RCP - MEN'S RESTROOM	0.7			3/4"	12
---	---				----------	---	---	45	46	20/1	12	WALK-IN FREEZER - HEAT		0.5		3/4"	12
---	---				----------	---	---	47	48	20/1	12	VESTIBULE - RCP			1.0	3/4"	12
					SPD			49	50	20/1	12	STOREFRONT - RCP	0.2			3/4"	12
					----------			51	52	20/1	12	STOREFRONT - RCP		0.2		3/4"	12
					----------			53	54	20/1	12	STOREFRONT - RCP			0.2	3/4"	12
		9.4	10.2	10.2	**SUB-TOTAL**	KVA			KVA	**SUB-TOTAL**			10.2	9.1	10.7		
									KVA	**GROSS-TOTAL**			19.6	19.3	20.9		59.8

EMERGENCY POWER: **NO** | MAIN BREAKER: | BRANCH: | MAIN LUGS: **YES** | A.I.C. RATING: 18,000

PANELBOARD AND WIRING SCHEDULE

PANELBOARD: **D** | AMPERES: 225 | VOLTAGE: 120/208 | PHASE: 3 | WIRE: 4 | MANUF.: SQUARE D | TYPE: MODULAR

GND	CON	LOAD A	LOAD B	LOAD C	DESIGNATION	WIRE	BKR	CKT	CKT	BKR	WIRE	DESIGNATION	LOAD A	LOAD B	LOAD C	CON	GND
12	3/4"	1.0			CUSTOMER AREA - LTG.	12	20/1	1	2	20/1	12	COUNTER AREA - LTG.	1.9			3/4"	12
12	3/4"		1.6		CUSTOMER AREA - LTG.	12	20/1	3	4	20/1	12	BUILDING CANOPY - LTG		1.3		3/4"	12
12	3/4"			0.9	COOLER - LTG	12	20/1	5	6	20/1	12	COVE - LTG.			0.4	3/4"	12
12	3/4"	1.1			BACK ROOM - LTG	12	20/1	7	8	20/1	12	GRAPHICS - LTG	1.0			3/4"	12
12	3/4"		0.2		BACK ROOM - LTG	12	20/1	9	10	20/1	12	EMERGENCY LTG		0.1		3/4"	12
10	1"			1.2	SITE SIGN	10	20/1	11	12	20/1	10	SITE POLE LIGHTS			1.5	1"	10
10	1"	1.2			SITE SIGN	10	20/1	13	14	--	--	----------	1.5			--	--
10	1"		1.2		SITE SIGN	10	20/1	15	16	--	--	----------		1.5		--	--
10	1"			1.2	SITE SIGN	10	20/1	17	18	20/1	12	CUSTOMER AREA - LTG.			0.9	3/4"	12
12	3/4"	0.2			COOLER /FREEZER LTG	12	20/1	19	20	20/1	12	HOOD LIGHTS	1.0			3/4"	12
12	3/4"				FUT. CONVECTION OVEN		30/2	21	22	20/1	12	HUSSMAN DISPLAY		1.1		3/4"	12
---	---				----------		GFI	23	24	20/1	12	HUSSMAN DISPLAY			1.1	3/4"	12
---	---				----------		---	25	26	20/3	12	FUT. DISPOSAL				3/4"	12
12	3/4"		1.5		HOT SANDWICH CASE 120V	12	20/1	27	28	GFI	---	----------				---	---
12	3/4"			1.0	FOUNTAIN MACHINE	12	GFI	29	30	---	---	----------				---	---
10	3/4"	1.7			ICEMAKER - INDOOR UNIT	10	20/2	31	32	20/2	12	HOLDING CABINET	1.0			3/4"	12
---	---		1.7		----------	---	---	33	34	GFI	---	----------		1.0		---	---
12	3/4"			0.5	FOOD PREP TABLE	12	20/2	35	36	20/1	12	FUT. FOOD WARMER				3/4"	12
---	---	0.5			----------	---	---	37	38	20/2	10	COOLER - COMPRESSOR	1.2			3/4"	10
12	3/4"		1.0		CONVECTION OVEN	12	GFI	39	40	---	---	----------		1.2		---	---
12	3/4"				FUT. CONVECTION OVEN	12	GFI	41	42	GFI	12	MICROWAVE			1.2	3/4"	12
12	3/4"				FUT. FRYER	12	GFI	43	44	20/2	12	FUT. HOLDING CABINET				3/4"	12
12	3/4"		1.0		GRIDDLE	12	GFI	45	46	GFI	---	----------				---	---
12	3/4"			1.4	FRYER	12	GFI	47	48	20/1	12	WORKTOP COOLER			1.0	3/4"	12
12	3/4"	0.3			LTG - BEER CAVE	12	20/1	49	50	20/1	12	CIGARETTE WALL - RCP	0.5			3/4"	12
12	3/4"		0.2		STORAGE - LTG	12	20/1	51	52	20/2	12	DELI CASE - COMPRESSOR		1.2		3/4"	12
12	3/4"			0.5	RESTROOM - LTG	12	20/1	53	54	---	---	----------			1.2	---	---
		6.0	8.4	6.6	**SUB-TOTAL**	KVA			KVA	**SUB-TOTAL**			8.1	7.4	7.3		
									KVA	**GROSS-TOTAL**			14.1	15.8	13.9		43.8

EMERGENCY POWER: **NO** | MAIN BREAKER: | BRANCH: | MAIN LUGS: **YES** | A.I.C. RATING: 18,000

PANELBOARD AND WIRING SCHEDULE

PANELBOARD: **C** | AMPERES: 225 | VOLTAGE: 120/208 | PHASE: 3 | WIRE: 4 | MANUF.: SQUARE D | TYPE: MODULAR

GND	CON	LOAD A	LOAD B	LOAD C	DESIGNATION	WIRE	BKR	CKT	CKT	BKR	WIRE	DESIGNATION	LOAD A	LOAD B	LOAD C	CON	GND
10	3/4"				FUT. BEAN TO CUP MACHINE	10	30/2	1	2	GFI	12	TEA MACHINE	1.0			3/4"	12
---	---				----------	---	---	3	4	GFI	12	FOUNTAIN WALL RCP		0.2		3/4"	12
12	3/4"			1.2	COFFEE BREWER	12	GFI	5	6	GFI	12	FOUNTAIN MACHINE			1.0	3/4"	12
12	3/4"	0.2			BACK DELI WALL RCP	12	GFI	7	8	GFI	12	FOUNTAIN WALL RCP	0.2			3/4"	12
12	3/4"		1.0		TOASTER - RCP	12	GFI	9	10	30/1	10	CAPPUCCINO		1.0		3/4"	10
12	3/4"			1.5	INDUCTION RANGE - RCP	12	GFI	11	12	30/1	10	CHOCOLATE CAPPUCCINO			1.0	3/4"	10
12	3/4"	1.0			BACK DELI WALL RCP	12	GFI	13	14	GFI	12	FRAPPE MACHINE	1.0			3/4"	12
12	3/4"		1.0		BAKED GOODS RECEPTACLE	12	GFI	15	16	30/2	10	BEAN TO CUP MACHINE		2.5		3/4"	10
12	3/4"			1.2	FROZEN CARB. BEVERAGE	12	20/2	17	18	---	---	----------			2.5	---	---
---	---	1.2			----------	---	---	19	20	GFI	12	FREAL FREEZER	1.2			3/4"	12
12	3/4"		1.2		FREAL MIXER	12	GFI	21	22	20/3	12	MAU COMPRESSOR		0.8		3/4"	12
12	3/4"			1.0	MICROWAVE	12	20/1	23	24	---	---	----------			0.8	---	---
12	3/4"	1.0			BEER CAVE DOORS	12	20/1	25	26	---	---	----------	0.8			---	---
12	3/4"		1.0		COOLER DOORS	12	20/1	27	28	GFI	12	MICROWAVE		1.2		3/4"	12
12	3/4"			1.0	BEER CAVE EVAPORATOR	12	20/1	29	30	GFI	12	HOOD WALL - RCP			0.8	3/4"	12
12	3/4"	1.5			COOLER EVAPORATOR	12	20/1	31	32	30/2	10	BEAN TO CUP MACHINE	2.5			3/4"	10
12	3/4"		1.5		COOLER EVAPORATOR	12	20/1	33	34	---	---	----------		2.5		---	---
12	3/4"			1.0	ICE CHEST	12	GFI	35	36	GFI	12	FREEZER - RCP			1.0	3/4"	12
12	3/4"	1.0			ICE CHEST	12	GFI	37	38	GFI	12	REFRIGERATED CASE	0.4			3/4"	12
12	3/4"		0.2		FOUNTAIN WALL RCP	12	GFI	39	40	50/2	8	STEAM TABLE		2.6		3/4"	10
12	3/4"			0.2	FOUNTAIN WALL RCP	12	GFI	41	42	---	---	----------			2.6	---	---
10	3/4"	1.7			ICEMAKER - INDOOR UNIT	10	20/2	43	44	GFI	12	FRONT DELI WALL RECEPTACLE	0.2			3/4"	12
---	---		1.7		----------	---	---	45	46	GFI	12	HOOD WALL - RCP		1.0		3/4"	12
12	3/4"			1.2	CREAM AND SUGAR MACH.	12	GFI	47	48	GFI	12	CARBONATION PUMPS			1.0	3/4"	12
					SPD			49	50	GFI	12	HOOD WALL - RCP	0.4			3/4"	12
					----------			51	52	20/1	12	DELI ISLAND - RCP		0.7		3/4"	12
					----------			53	54	GFI	12	FOUNTAIN WALL RCP					
		7.6	7.6	8.3	**SUB-TOTAL**	KVA			KVA	**SUB-TOTAL**			7.7	12.5	10.7		
									KVA	**GROSS-TOTAL**			15.3	20.1	19.0		54.4

EMERGENCY POWER: **NO** | MAIN BREAKER: | BRANCH: | MAIN LUGS: **YES** | A.I.C. RATING: 18,000

PANELBOARD AND WIRING SCHEDULE

PANELBOARD: **D1** | AMPERES: 225 | VOLTAGE: 120/208 | PHASE: 3 | WIRE: 4 | MANUF.: SQUARE D | TYPE: MODULAR

GND	CON	LOAD A	LOAD B	LOAD C	DESIGNATION	WIRE	BKR	CKT	CKT	BKR	WIRE	DESIGNATION	LOAD A	LOAD B	LOAD C	CON	GND
12	3/4"	0.2			BUILDING SIGN - LTG	12	20/1	1	2	50/3	8	FRYER	4.7			3/4"	10
12	3/4"		0.5		BUILDING CANOPY - LTG	12	20/1	3	4	---	---	----------		4.7		---	---
12	3/4"			0.2	BUILDING MOUNTED - LTG	12	20/1	5	6	---	---	----------			4.7	---	---
10	3/4"	1.5			SITE POLE LIGHTS	10	20/1	7	8	40/3	8	OVEN / PROOFER	3.5			3/4"	10
10	3/4"		1.5		SITE POLE LIGHTS	10	20/1	9	10	---	---	----------		3.5		---	---
10	3/4"			1.5	SITE POLE LIGHTS	10	20/1	11	12	---	---	----------			3.5	---	---
10	1"	1.2			SITE SIGN	10	20/1	13	14	20/1	12	OVEN - HOLDING CABINET	2.0			3/4"	12
10	1"		1.2		SITE SIGN	10	20/1	15	16	40/2	8	GRIDDLE		3.5		3/4"	10
12	3/4"			1.0	THERMAL SERVER	12	20/1	17	18	---	---	----------			3.5	---	---
12	3/4"	1.0			THERMAL SERVER	12	20/1	19	20	20/1	12	THERMAL SERVER	1.0			3/4"	12
12	3/4"		1.0		OVEN / PROOFER	12	GFI	21	22	20/1	12	EXT. LIGHTING CONTROL		0.0		3/4"	12
12	3/4"			1.0	OVEN / PROOFER	12	GFI	23	24	20/1		SPARE					
12	3/4"	1.0			FRYER	12	20/1	25	26	40/3	8	OVEN / PROOFER	3.5			3/4"	10
12	3/4"		1.0		GRIDDLE	12	20/1	27	28	---	---	----------		3.5		---	---
10	3/4"			2.8	PCU-2	8	40/3	29	30	---	---	----------			3.5	---	---
---	---	2.8			----------	---	---	31	32	20/1	12	CASH REGISTER - RCP	0.5			3/4"	12
---	---		2.8		----------	---	---	33	34	20/1	12	ICE CREAM CASE		0.5		3/4"	12
12	3/4"			0.2	EXHAUST FAN	12	20/1	35	36	GFI	12	REFRIGERATED CASE			0.4	3/4"	12
10	3/4"	0.8			HOOD EXHAUST FAN	10	20/3	37	38	30/2	10	MAU FAN	0.9			3/4"	10
---	---		0.8		----------	---	---	39	40	---	---	----------		0.9		---	---
---	---			0.8	----------	---	---	41	42	GFI	12	HOT FOOD WALL - RCP			0.6	3/4"	12
12	3/4"	0.6			SODA WALL - RCP	12	GFI	43	44	20/3	12	COOLER COMPRESSOR	1.0			3/4"	12
12	3/4"		0.4		SODA WALL - RCP	12	GFI	45	46	---	---	----------		1.0		---	---
10	3/4"			2.0	AIR STAND	10	30/1	47	48	---	---	----------			1.0	---	---
10	3/4"	1.0			AIR STAND	10	30/1	49	50	20/1		SPARE					
					SPARE		20/1	51	52	20/1		SPARE					
					SPARE		20/1	53	54	20/1		SPARE					
		10.1	9.2	9.5	**SUB-TOTAL**	KVA			KVA	**SUB-TOTAL**			17.1	17.6	17.2		
									KVA	**GROSS-TOTAL**			27.2	26.8	26.7		80.7

EMERGENCY POWER: **NO** | MAIN BREAKER: | BRANCH: | MAIN LUGS: **YES** | A.I.C. RATING: 18,000

01 ELECTRICAL DETAILS

E500 — NO SCALE

CMW The Shape of Ideas

Architecture
Civil Engineering
Landscape Architecture
a: 249 East Main Street
Suite 100
Lexington, Kentucky 40507
o: (859) 254-6623
w: www.cmwaec.com

CMTA
10411 Meeting Street, Prospect, Kentucky 40059
502.326.3888 1.502.326.2991 www.cmta.com

COMMONWEALTH OF KENTUCKY — BRAD PERSON — LICENSED PROFESSIONAL ENGINEER — 28944

ELECTRICAL SCHEDULES

FiveStar #4460 Hopkinsville
NEWCOMB OIL CO., LLC
3070 PEMBROKE RD.
HOPKINSVILLE, KY 42240

CONSTRUCTION DOCUMENTS

Issue Date:	May, 29 2024
Drawn By:	WTD
Checked By:	DRH
Revisions:	

Mark	Date

AHJ SEAL

Project Number
24010.01

E-5.00

PLOT DATE: Friday, June 21, 2024 1:03:33 PM

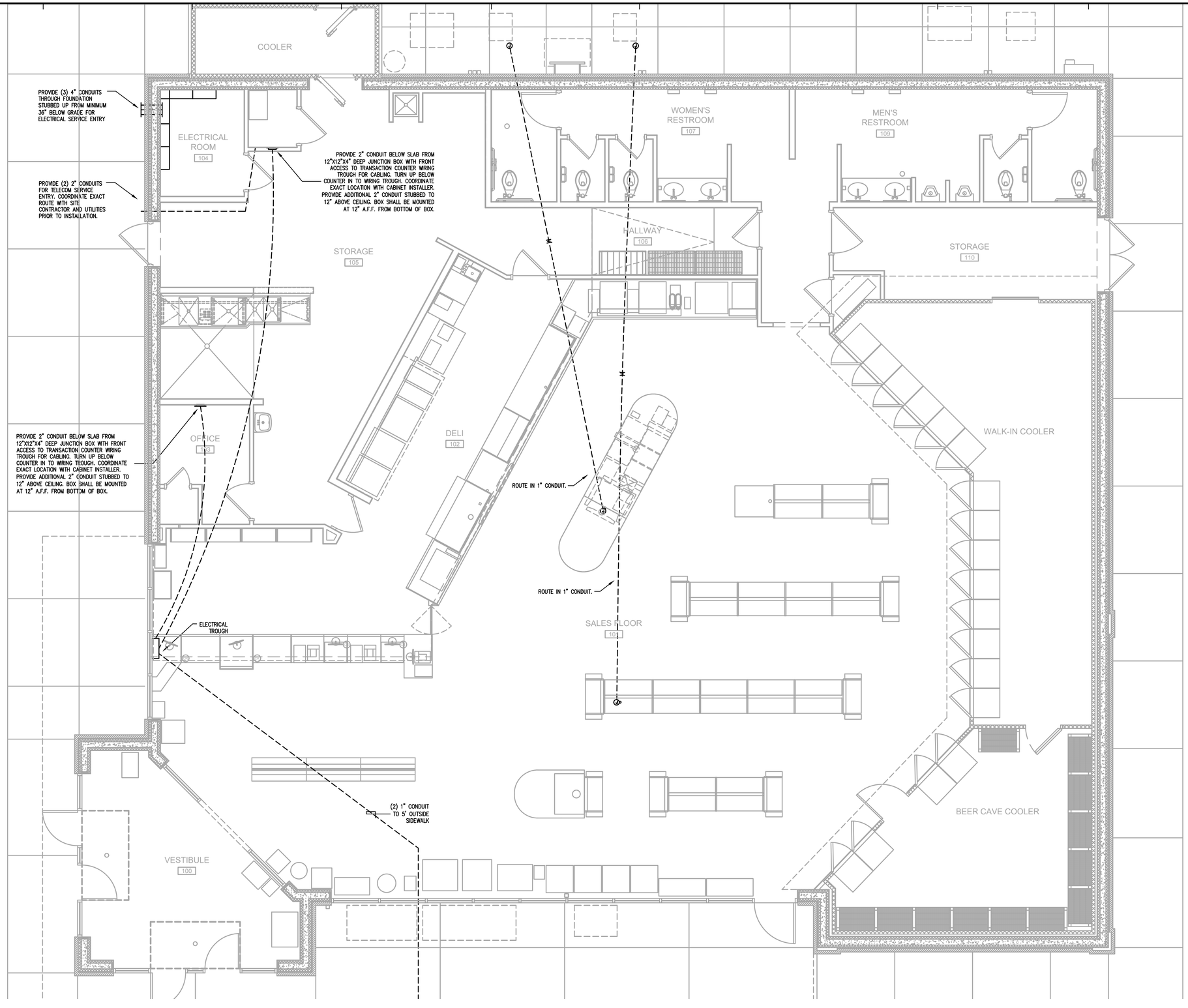

ELECTRICAL - UNDERSLAB PLAN

1/4" = 1'-0"

CMW The Shape of Ideas

Architecture
Civil Engineering
Landscape Architecture
a: 249 East Main Street
Suite 100
Lexington, Kentucky 40507
o: (859) 254-6623
w: www.cmwaec.com

CMTA
15411 Meeting Street, Prospect, Kentucky 40059
502.326.3083 f 502.326.2991 www.cmta.com

COMMONWEALTH OF KENTUCKY — BRAD PERSON — 28424 — LICENSED PROFESSIONAL ENGINEER — STATE OF KENTUCKY

ELECTRICAL UNDERSLAB PLAN

FiveStar #4460 Hopkinsville
NEWCOMB OIL CO., LLC
3070 PEMBROKE RD.
HOPKINSVILLE, KY 42240

CONSTRUCTION DOCUMENTS

Issue Date:	May, 29 2024
Drawn By:	WTD
Checked By:	DRH
Revisions:	

Mark	Date

AHJ SEAL

Project Number
24010.01

UE-3.00

PLOT DATE: Friday, June 21, 2024 1:03:40 PM