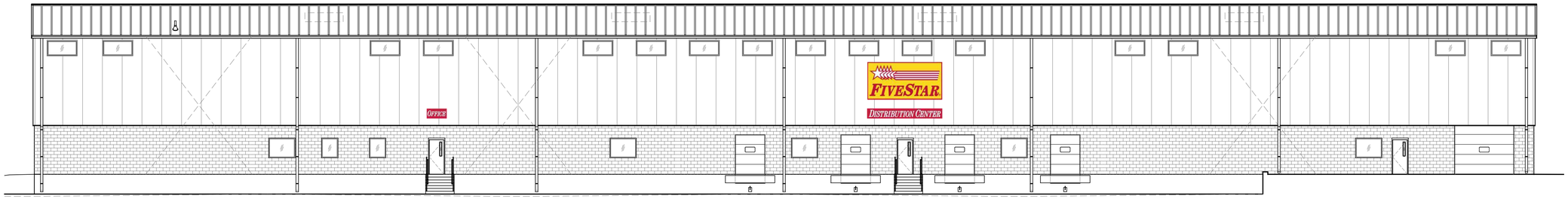

DISTRIBUTION CENTER II - PHASE I

NEWCOMB OIL CO., LLC

951 WITHROW CT.
BARDSTOWN, KY 40004

CMW, INC.
Architect
249 E Main Street, Suite 100, Lexington, KY 40507
O 859.254.6623

POAGE ENGINEERING & ASSOCIATES, INC
Structural Engineer
880 Sparta Court, Suite 200, Lexington, KY 40504
O 859.255.9034

NEWCOMB OIL COMPANY, LLC.
Owner
951 Withrow Ct., Bardstown, KY 40004
O 502.348.3961

BCD, INC.
General Contractor
1962 Filiatreau Lane, Bardstown, KY 40004
O 502.348.2305

VICINITY MAP

INDEX OF DRAWINGS

GENERAL

G1.01 LIFE SAFETY EGRESS PLAN / CODE DATA
G1.02 ABBREVIATIONS, SYMBOLS, & GENERAL INFORMATION
G1.03 PARTITION TYPES, NOTES, & TYPICAL DETAILS

STRUCTURAL

S0.01 STRUCTURAL NOTES
S0.02 STRUCTURAL NOTES
S1.01 FOUNDATION PLAN
S2.01 MEZZANINE FRAMING PLAN
S3.01 SECTIONS & DETAILS
S3.02 SECTIONS & DETAILS
S4.01 SECTIONS & DETAILS

ARCHITECTURAL

A1.01 FLOOR PLAN
A1.02 REFLECTED CEILING PLAN
A1.03 ROOF PLAN
A2.01 EXTERIOR ELEVATIONS
A3.01 BUILDING SECTIONS
A3.02 WALL SECTIONS / STAIR DETAILS
A4.01 ENLARGED FLOOR PLANS / INTERIOR DETAILS
A5.01 DOOR AND WINDOW DETAILS
A6.01 SCHEDULES AND DETAILS

PROJECT INFORMATION

APPLICABLE BUILDING CODES

BUILDING CODE:	IBC 2015 / KBC 2018 (3rd Edition)
ACCESSIBILITY CODE:	ADA 2010 / ANSI 2009
ENERGY CODE:	IECC 2012

USE AND OCCUPANCY: S-1 STORAGE

CONSTRUCTION TYPE: 2B

BUILDING INFORMATION:

BUILDING:	43,026 s.f.
TOTAL BUILDING SIZE:	43,026 s.f.
FIRE SUPPRESSION:	AUTOMATIC SPRINKLER SYSTEM THROUGHOUT

OCCUPANCY ALLOWANCE

FUNCTION OF SPACE	ALLOWANCE	AREA	OCCUPANCY
WAREHOUSE	500 GROSS	43,026	87
TOTAL OCCUPANCY ALLOWANCE:			87

CMW
The Shape Of Ideas

Architecture
Civil Engineering Landscape Architecture

a: 249 East Main Street, Suite 100
Lexington, Kentucky 40507
o: (859) 254-6623
w: www.cmwaec.com

FAILURE TO ABIDE BY DESIGN DOCUMENTS OR TO OBTAIN GUIDANCE:
THE DESIGN PROFESSIONAL WAIVES ANY AND ALL RESPONSIBILITY AND LIABILITY FOR PROBLEMS WHICH ARISE FROM FAILURE TO FOLLOW THESE PLANS, SPECIFICATIONS AND THE DESIGN INTENT THEY CONVEY, OR FOR OTHERS' FAILURE TO OBTAIN AND/OR FOLLOW THE DESIGN PROFESSIONAL'S GUIDANCE WITH RESPECT TO ANY ERRORS, OMISSIONS, INCONSISTENCIES, AMBIGUITIES OR CONFLICTS WHICH ARE ALLEGED.

OWNERSHIP OF INSTRUMENTS OF SERVICE AND DISTRIBUTION CENTER PROTOTYPE DESIGN:
ALL REPORTS, DRAWINGS, SPECIFICATIONS, DIGITAL DATA FILES, FIELD DATA, NOTES AND OTHER DOCUMENTS AND INSTRUMENTS PREPARED BY CMW, INC. ARE CMW, INC'S "INSTRUMENTS OF SERVICE". THE "DISTRIBUTION CENTER PROTOTYPE DESIGN" SHALL REMAIN THE PROPERTY OF NEWCOMB OIL CO., LLC, WHO SHALL RETAIN ALL COMMON LAW, STATUTORY AND OTHER RESERVED RIGHTS INCLUDING COPYRIGHT THERETO.

BILL PICKERING REGISTERED No. 4915 COMMONWEALTH OF KENTUCKY ARCHITECT
01 AUGUST 2025

COVERSHEET
DISTRIBUTION CENTER ii - PHASE I
NEWCOMB OIL CO., LLC
951 WITHROW CT.
BARDSTOWN, KY 40004

PERMIT DOCUMENTS

Issue Date:
AUGUST 1, 2025

AHJ SEAL

Project Number
25011.01

PLOT DATE:

FIRE PUMP ROOM 105

A. FIRE PUMP ROOM ENCLOSURE PER KBC 913.2.1 AND EXCEPTION 1: ROOM SEPARATED FROM OTHER AREAS OF BUILDING BY 1-HR FIRE BARRIER WALL CONSTRUCTED IN ACCORDANCE WITH KBC SECTION 707 FIRE BARRIERS AND WITH 1-HR FIRE RATED HORIZONTAL ASSEMBLY OVER THE TOP OF THE ROOM IN ACCORDANCE WITH SECTION 711 HORIZONTAL ASSEMBLIES.
B. NOTE REQUIRED FIRE RATING REDUCED FROM 2-HR TO 1-HR AS BUILDING IS EQUIPPED THROUGHOUT WITH AN AUTOMATIC SPRINKLER SYSTEM IN ACCORDANCE WITH KBC 903.3.1.1.

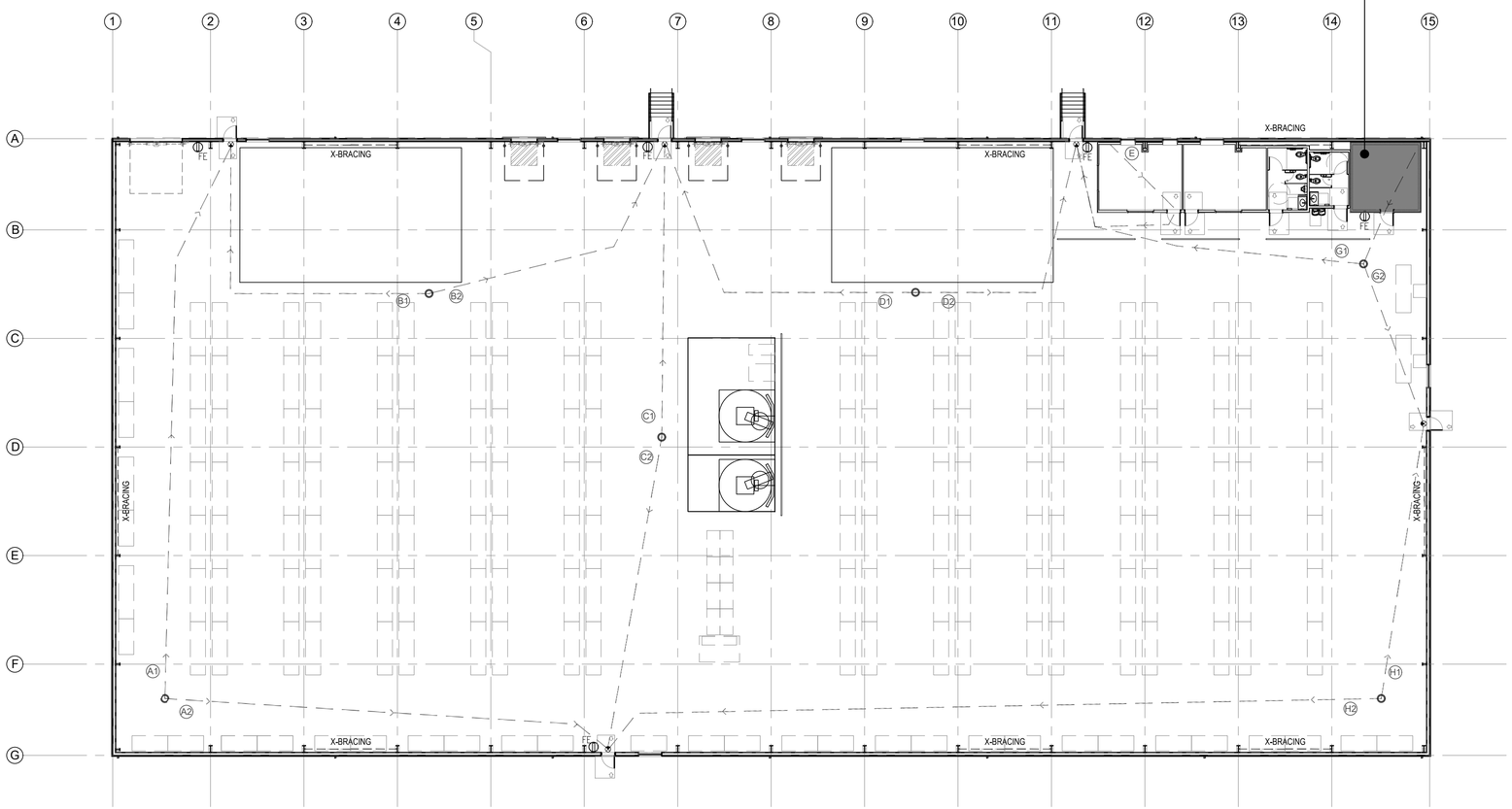

1 / G1.01 LIFE SAFETY FLOOR PLAN
1/16" = 1'-0"

Life Safety Floor Plan General Notes

A. REFER TO DOOR SCHEDULE FOR DOOR ASSEMBLIES AND DOOR HARDWARE
B. REFER TO ENLARGED FLOOR PLANS FOR ACCESSIBILITY CLEARANCES IN RESTROOMS
C. REFER TO ELECTRICAL FOR EXIT SIGNS

Life Safety Floor Plan - Legend

PLAN LEGEND	DESCRIPTION
60	FIRE-RATED FIRE BARRIER WALL ASSEMBLY FOR PUMP ROOM ENCLOSURE: 60 MINUTE (1-HOUR) FIRE-RATED FIRE BARRIER ASSEMBLY PER KBC 913.2.1 EXCEPTION 1 (BUILDING EQUIPPED THROUGHOUT WITH AUTOMATIC SPRINKLER SYSTEM PER KBC 903.3.1.1)
	TRAVEL ROUTE TO EXIT REFER TO TRAVEL DISTANCE SUMMARY TABLE FOR LENGTH OF COMMON PATH OF TRAVEL DISTANCE AND LENGTH OF EXIT ACCESS TRAVEL DISTANCE
	POINT ALONG COMMON PATH OF TRAVEL WHERE THERE ARE TWO EXIT ACCESS OPTIONS
FE	LOCATION OF WALL BRACKET MOUNTED HAND-HELD FIRE EXTINGUISHER (LOCATIONS SHOWN APPROXIMATE, COORDINATE FINAL PLACEMENT WITH FIRE AUTHORITIES.)
	ILLUMINATED EXIT SIGN - REFER ALSO TO ELECTRICAL
	SHADED PLAN AREA DENOTES EXTENT OF 1-HR FIRE-RATED HORIZONTAL ASSEMBLY OVER PUMP ROOM (IN CONJUNCTION WITH 1-HR FIRE-RATED FIRE BARRIER WALL ENCLOSURE OF PUMP ROOM)

Life Safety Floor Plan Travel Distance Summary Table

PLAN TAG	USE GROUP OCCUPANCY	COMMON PATH TRAVEL DISTANCE AT POINT WHERE THERE ARE TWO EXIT ACCESS OPTIONS KBC T1006.2.1		EXIT ACCESS TRAVEL DISTANCE TO EXIT KBC T1017.2	
		ALLOWED WITH SPRINKLER SYSTEM (feet)	PROPOSED (feet)	ALLOWED WITH SPRINKLER SYSTEM (feet)	PROPOSED (feet)
A1	S	100	--	400	130
A2	S	100	--	400	104
B1	S	100	--	400	80
B2	S	100	--	400	70
C1	S	100	--	400	67
C2	S	100	--	400	72
D1	S	100	--	400	80
D2	S	100	--	400	64
E	B (ACCESSORY)	100	--	400	61
F	S	100	28	400	00
G1	S	100	--	400	81
G2	S	100	--	400	39
H1	S	100	--	400	63
H2	S	100	--	400	181

Building Code Compliance Data

APPLICABLE CODE: 2018 KENTUCKY BUILDING CODE (KBC) 3rd Edition (INCLUDES REFERENCED STANDARDS LISTED IN THE KBC)

PROJECT DESCRIPTION: PROPOSED USE AS A WAREHOUSE FACILITY FOR STORAGE OF MATERIALS AND PRODUCTS SOLD IN CONVENIENCE STORES WITH ACCESSORY SPACES INCLUDING AN OFFICE AND BREAK ROOM. THE STORAGE AREA WILL INCLUDE OPEN RACK STORAGE AND LOADING DOCKS FOR TRUCK ACCESS.
PROPOSED CONSTRUCTION CONSISTS OF A ONE STORY PRE-ENGINEERED METAL BUILDING (PEMB) STRUCTURE SUPPORTED ON A CONTINUOUS SHALLOW CONCRETE FOUNDATION WITH INTERIOR CONCRETE SLAB-ON-GRADE, METAL BUILDING INSULATED EXTERIOR WALLS AND SLOPED INSULATED METAL ROOF STRUCTURE. INTERIOR FIT-UP INCLUDES STEEL STUD-FRAMED PARTITIONS WITH STEEL STUD-FRAMED CEILINGS. THE PROJECT INCLUDES ASSOCIATED FIRE PROTECTION SPRINKLER, PLUMBING, HVAC AND ELECTRICAL AND SITE DEVELOPMENT WORK. THE BUILDING IS SURROUNDED BY AN OPEN YARD AT LEAST 60 FEET IN WIDTH -REFER TO SITE LAYOUT PLAN.

KBC Chapter 3: USE GROUP AND OCCUPANCY CLASSIFICATION

BUILDING CLASSIFIED AS STORAGE MIXED USE NONSEPARATED
311.3 GROUP S-2 STORAGE (LOW-HAZARD)

ACCESSORY USES
304.1 GROUP B BUSINESS (OFFICE & BREAKROOM)

KBC Chapter 5: GENERAL BUILDING HEIGHT AND AREA

NOTE: PROPOSED BUILDING WILL BE EQUIPPED THROUGHOUT WITH AN AUTOMATIC SPRINKLER SYSTEM IN ACCORDANCE WITH KBC 903.3.1.1

TABLE 504.3 - HEIGHT (2-B SPRINKLERED):	ALLOWABLE	PROPOSED
GROUP S-2 STORAGE	75 FT	24 FT
GROUP B BUSINESS (ACCESSORY OCCUPANCY)	75 FT	24 FT

TABLE 504.4 - NUMBER OF STORIES (2-B SPRINKLERED):	ALLOWABLE	PROPOSED
GROUP S-2 STORAGE	4	1
GROUP B BUSINESS (ACCESSORY OCCUPANCY)	4	1

TABLE 506.2 - AREA (2-B SPRINKLERED):	ALLOWABLE	PROPOSED
GROUP S-2 STORAGE	*104,000 SF	42,456 SF
GROUP B BUSINESS (ACCESSORY OCCUPANCY)	92,000 SF	570 SF
*507.4 APPLIED BUILDING TOTAL FLOOR AREA (GROSS)		43,026 SF

506.3 - FRONTAGE INCREASE: A FRONTAGE INCREASE HAS NOT BEEN APPLIED ON THIS PROJECT AS THE PROPOSED AREA IS BASED ON THE APPLICATION OF THE UNLIMITED AREA PROVISION OF KBC 507.4

*507.4 - SPRINKLERED ONE-STORY GROUP S-2 BUILDING NOT LIMITED IN AREA: THE PROPOSED ONE-STORY BUILDING IS EQUIPPED THROUGHOUT WITH AN AUTOMATIC SPRINKLER SYSTEM IN ACCORDANCE WITH SECTION 903.3.1.1. AND IS SURROUNDED BY A YARD NOT LESS THAN 60 FEET IN WIDTH - REFER TO SITE LAYOUT PLAN.

508.2 - ACCESSORY OCCUPANCIES:	AREA	% OF BUILDING TOTAL FLOOR AREA
GROUP B BUSINESS	570 SF	1.3%

TABLE 508.3 - NONSEPARATED OCCUPANCIES: NO SEPARATION REQUIRED BETWEEN GROUP S AND ACCESSORY OCCUPANCY GROUP B.

KBC Chapter 6: TYPE OF CONSTRUCTION

TABLE 601 - TYPE 2-B NONCOMBUSTIBLE UNPROTECTED KBC 602.3

ELEMENT	FIRE RESISTANCE RATING
STRUCTURAL FRAME:	0-HR
BEARING WALLS (EXT):	0-HR
BEARING WALLS (INT):	0-HR
NONLOAD-BEARING WALLS & PARTITIONS (EXT):	0-HR*
NONLOAD-BEARING WALLS & PARTITIONS (INT):	0-HR
FLOOR CONSTRUCTION:	0-HR
ROOF CONSTRUCTION:	0-HR

* FIRE RATING FOR EXTERIOR WALLS LISTED IN TABLE 601 SUPERSEDES FIRE RATING LISTED IN TABLE 602 AS FIRE SEPARATION DISTANCE EXCEEDS 10 FEET - REFER TO SITE LAYOUT PLAN.

KBC Chapter 6: TYPE OF CONSTRUCTION

KBC 603 COMBUSTIBLE MATERIALS USED IN TYPE 2B CONSTRUCTION MAY INCLUDE THE FOLLOWING:
KBC 603.1.2 - THERMAL INSULATION (OTHER THAN FOAM PLASTIC) SHALL HAVE FLAME SPREAD INDEX OF 25 OR LESS.
KBC 603.1.3 - FOAM PLASTIC TO COMPLY WITH KBC CHAPTER 26. PLASTIC INSULATION EXPOSED TO BUILDING INTERIOR SHALL BE PROTECTED WITH A THERMAL BARRIER
KBC 603.1.14 - WOOD BLOCKING IN EXTERIOR WALLS AND ROOF FOR ATTACHMENT OF OTHER WORK TO BE FIRE-RETARDANT TREATED.
KBC 603.1.16 - MASTICS AND CAULKING MATERIALS USED BETWEEN COMPONENTS OF EXTERIOR WALL CONSTRUCTION.

KBC Chapter 10 MEANS OF EGRESS

1004.1 - DESIGN OCCUPANT LOAD

OCCUPANCY	OCCUPANCY TYPE	SF PER PERSON	ENCLOSED DESIGNED SF	CALCULATED OCCUPANT LOAD
STORAGE	S-2	500	42,456 GSF	85
BUSINESS	B	100	570 GSF	6
TOTAL DESIGNED OCCUPANT LOAD				91

KBC Chapter 16 STRUCTURAL DESIGN

STRUCTURAL LOADS: REFER TO STRUCTURAL DESIGN LOADS ON STRUCTURAL DRAWINGS AND SHOP DRAWINGS FOR THE PEMB

Special Inspection & Testing

KBC Chapter 17 SPECIAL INSPECTION AND TESTS

SPECIAL INSPECTION AND TESTING SHALL BE CONDUCTED BY SPECIAL INSPECTORS OF A SPECIAL INSPECTION AGENCY IN ACCORDANCE WITH SECTION 1704 AND 1705 OF THE 2018 KENTUCKY BUILDING CODE (KBC) AND AS DEFINED IN THE CONSTRUCTION DOCUMENTS.

THE OWNER WILL RETAIN THE SERVICES OF A SPECIAL INSPECTION AGENCY TO CONDUCT SPECIAL INSPECTION AND TESTING.

REFER TO STRUCTURAL DRAWINGS FOR NOTES ON SPECIAL INSPECTIONS AND TESTING AND THE "STATEMENT OF SPECIAL INSPECTION".

SEISMIC DESIGN CATEGORY: REFER TO STRUCTURAL NOTES ON STRUCTURAL DRAWINGS

FOR SOILS SPECIAL INSPECTION AND TESTING, THE GEOTECHNICAL EXPLORATION REPORT IN CONJUNCTION WITH NOTES ON THE STRUCTURAL DRAWINGS SHALL BE USED TO DETERMINE COMPLIANCE.

THE FOLLOWING IS AN OVERVIEW OF THE CATEGORIES OF WORK SUBJECT TO SPECIAL INSPECTION AND TESTING:
- STEEL CONSTRUCTION
  - a) STRUCTURAL STEEL
  - b) OTHER THAN STRUCTURAL STEEL
- CONCRETE CONSTRUCTION
- SOILS
- INSPECTION OF FABRICATED ITEMS
  - a) PREFABRICATED METAL BUILDING STRUCTURE (PEMB)
- FABRICATORS CERTIFICATE OF COMPLIANCE
  - a) PREFABRICATED METAL BUILDING STRUCTURE (PEMB)

CONTRACTOR RESPONSIBILITIES: THE CONTRACTOR HAS RESPONSIBILITIES RELATED TO SPECIAL INSPECTION AND TESTING THAT INCLUDES:
- COORDINATING THE CONSTRUCTION SCHEDULE WITH SPECIAL INSPECTION AGENCY
- SCHEDULING THE DATE & TIME, WITH A MINIMUM 24 HOUR NOTICE TO THE SPECIAL INSPECTION AGENCY OF WHEN THE AGENCY NEEDS TO BE ON-SITE TO CONDUCT INSPECTION & TESTING OF WORK SUBJECT TO SPECIAL INSPECTION & TESTING.
- FURNISHING CONTRACTOR SUBMITTALS APPLICABLE TO WORK SUBJECT TO SPECIAL INSPECTION TO THE SPECIAL INSPECTION AGENCY.
- ENSURING FABRICATORS CERTIFICATES OF COMPLIANCE ARE SUBMITTED FOLLOWING COMPLETION OF FABRICATION.
- MONITORING STATUS AND COMPLETION OF SPECIAL INSPECTION AND TESTING OF WORK SUBJECT TO SPECIAL INSPECTION AND TESTING.
- PERFORMING CORRECTIVE ACTIONS WHERE REQUIRED.

CMW The Shape of Ideas
Architecture
Civil Engineering
Landscape Architecture
a: 249 East Main Street
Suite 100
Lexington, Kentucky 40507
o: (859) 254-6623
w: www.cmwaec.com

BILL PICKERING REGISTERED No. 4915 COMMONWEALTH OF KENTUCKY ARCHITECT
01 AUGUST 2025

LIFE SAFETY EGRESS PLAN / CODE DATA
DISTRIBUTION CENTER II - PHASE I
NEWCOMB OIL CO., LLC
951 WITHROW CT.
BARDSTOWN, KY 40004

PERMIT DOCUMENTS

Issue Date:	AUGUST 1, 2025
Drawn By:	JTH/BP/JMT
Checked By:	BP
Revisions:	
Mark	Date

AHJ SEAL

Project Number
25011.01

G1.01

File Name: Q:\Newcomb Oil\25011.01 Distribution Center II\02 DWG\03 ARCH\04 CD PHASE\SHEET\G1.01.dwg
PLOT DATE: Friday, August 1, 2025 11:01:31 AM

ABBREVIATIONS

A	
@	AT
AAV	AUTOMATIC AIR VENT
AB	ANCHOR BOLT
A/C	AIR CONDITIONING
ACC FL	ACCESSIBLE FLOOR
ACOUS	ACOUSTICAL
ACT	ACOUSTICAL CEILING TILE
AD	AREA DRAIN, ACCESS DOOR
ADJ	ADJUST, ADJUSTABLE
ADH	ADHESIVE
AFF	ABOVE FINISH FLOOR
AFG	ABOVE FINISH GRADE
AGG	AGGREGATE
AHU	AIR HANDING UNIT
ALUM, AL	ALUMINUM
AMB	AMBIENT
AMP	AMPERE
ANCH	ANCHOR
AP	ACCESS PANEL
APPROX	APPROXIMATE
ASB	ASBESTOS
AUTO	AUTOMATIC
AUX	AUXILIARY
B	
BD	BOARD, BOILER DRAIN
BETW	BETWEEN
BEV	BEVELED
BFC	BELOW FINISHED CEILING
BFP	BACKFLOW PREVENTER
BIT	BITUMINOUS
BLDG	BUILDING
BLK	BLOCK
BLKG	BLOCKING
BM	BEAM, BENCH MARK
BOT	BOTTOM
BRNG	BEARING
BTU	BRITISH THERMAL UNIT
BUR	BUILT UP ROOFING
C	
C	COURSES, CONDUIT, CUBIC
CAB	CABINET
CB	CONCRETE BLOCK, CASING BEAD, CATCH BASIN, CIRCUIT BREAKER
C/C	CENTER TO CENTER (SAME MEANING AS OC)
CCTV	CLOSED CIRCUIT TELEVISION
CEM	CEMENT
CER	CERAMIC
CF	CUBIC FEET
CFS	COLD FORMED STEEL
CHAN	CHANNEL
CI	CAST IRON
CKT	CIRCUIT
CKT-BKR	CIRCUIT BREAKER
CJ	CONTROL JOINT
CLG	CEILING
CLOS	CLOSET
CLR	CLEAR
CMP	CORRUGATED METAL PIPE
CMU	CONCRETE MASONRY UNIT
CO	CLEANOUT
CO2	CARBON DIOXIDE
COEFF	COEFFICIENT
COL	COLUMN
CONC	CONCRETE
COND	CONDITION, CONDENSER, CONDENSATE
CONST	CONSTRUCTION
CONT	CONTINUOUS, CONTINUATION
CONTR	CONTRACTOR
CONV	CONVERTER, CONVENIENCE
CORR	CORRIDOR, CORRUGATED
CR	COLD ROLLED
CSG	CASING
CT	CERAMIC TILE
CTSK	COUNTERSINK
CU	CONDENSING UNIT, COPPER
CUH	CABINET UNIT HEATER
CULV	CULVERT
CV	CHECK VALVE
CW	COLD WATER, CLOCKWISE
CY	CUBIC YARD
D	
DACT	DIGITAL ALARM COMMUNICATOR TRANSMITTER
DBL	DOUBLE
DEP	DEPRESSED
DET	DETAIL; DETECTOR
DF	DRINKING FOUNTAIN
DH	DOUBLE HUNG
DIA	DIAMETER
DIM	DIMENSION
DISC	DISCONNECT
DISCH	DISCHARGE
DISTR	DISTRIBUTION
DMPR	DAMPER
DN	DOWN
DO	DITTO
DS	DOWN SPOUT
DW	DRYWALL, DOMESTIC WATER
DWG(S)	DRAWING(S)
E	
EA	EACH
EF	EXHAUST FAN
EFL	EFFLUENT
EJ	EXPANSION JOINT
EL	ELEVATION
ELEC	ELECTRIC, ELECTRICAL
ELEV	ELEVATOR, ELEVATION
EMER	EMERGENCY
ENCL	ENCLOSURE
ENTR	ENTRANCE
EQ	EQUAL
EQL	END OF LINE RESISTOR
EQUIV	EQUIVALENT
ESMT	EASEMENT
EUH	ELECTRIC UNIT HEATER
EW	EACH WAY
EWC	ELECTRIC WATER COOLER
EWEF	EACH WAY EACH FACE
EWH	ELECTRIC WATER HEATER
EXCAV	EXCAVATE
EXCHGR	EXCHANGER
EXH	EXHAUST
EXIST	EXISTING
EXPAN	EXPANSION
EXT	EXTERIOR
F	
FA	FORCED AIR, FIRE ALARM
FAB	FABRICATE
FACP	FIRE ALARM CONTROL PANEL
FC	FIRE CODE
FCU	FAN COIL UNIT
FD	FLOOR DRAIN, FIRE DAMPER
FDN	FOUNDATION
FE	FIRE EXTINGUISHER
FTW	FIRE TREATED WOOD
FFE	FINISHED FLOOR ELEVATION
FH	FLAT HEAD, FIRE HOSE, FIRE HYDRANT
FIN	FINISH, FINISHED
FIXT	FIXTURE
FL	FLOOR
FLEX	FLEXIBLE
FLUOR	FLUORESCENT
FRT	FIRE RESISTANT TREATED
FS	FLOW SWITCH
FT	FOOT OR FEET
FTG	FOOTING
FURR	FURRING
FV	FIELD VERIFY
G	
GA	GAUGE
GALV	GALVANIZED
GB	GRAB BAR
GCB	GLAZED CONCRETE BLOCK
GD	GRAVITY DAMPER
GEN	GENERATOR
GFCI	GROUND FAULT CIRCUIT INTERRUPTER
GH	GRAVITY HOOD
GI	GALVANIZED IRON
GL	GLASS, GLAZING
GLUE LAM	GLUE-LAMINATED
GND	GROUND
GPM	GALLONS PER MINUTE
GR	GRADE
GRV	GRAVITY ROOF VENT
GS	GALVANIZED STEEL
GST	GLAZED STRUCTURAL TILE
GWH	GAS WATER HEATER
GV	GRAVITY VENT
GYP	GYPSUM
H	
H	HIGH
HARD	HARDENED
HB	HOSE BIBB
HC	HOLLOW CORE
HDBD	HARD BOARD
HDCP	HANDICAPPED
HDR	HEADER
HDWE	HARDWARE
HDWD	HARDWOOD
HEX	HEXAGONAL
HID	HIGH INTENSITY DISCHARGE
HOL	HOLLOW
HM	HOLLOW METAL
HORIZ	HORIZONTAL
HP	HIGH POINT, HORSE POWER, HEAT PUMP
HPS	HIGH PRESSURE SODIUM
HRU	HEAT RECOVERY UNIT
HT	HEIGHT
HTG	HEATING
HTR	HEATER
HV	HEAT & VENTILATION UNIT
HVAC	HEATING, VENTILATION AND AIR CONDITIONING
HW	HOT WATER, HARD WHITE
I	
ICF	INSULATED CONCRETE FORM
ID	INSIDE DIAMETER
IF	INSIDE FACE
IN	INCH, INCHES
INSUL	INSULATION, INSULATE
INT	INTERIOR
INV	INVERT
J	
JB	JUNCTION BOX
JCT, J	JUNCTION
JST	JOIST
JT	JOINT
K	
KBC	KENTUCKY BUILDING CODE (EDITION YEAR)
KCMIL	ONE THOUSAND CIRCULAR MILS
KW	KILO-WATT
KWH	KILO-WATT HOUR
KVA	KILO-VOLT AMPERE
KVAR	KILO-VOLT AMPERES REACTIVE
L	
L	ANGLE, LONG, LEFT
LAM	LAMINATE
LAV	LAVATORY
LF	LIGHT FIXTURE, LINEAR FEET
LH	LEFT HAND
LOC	LOCATION
LP	LOW POINT
LT	LIGHT
LTG(S)	LIGHTING, LIGHTS
LTWT	LIGHTWEIGHT
M	
MAS	MASONRY
MAV	MANUAL AIR VENT
MATL	MATERIAL
MAU	MAKE UP AIR UNIT
MAX	MAXIMUM
MB	MARKER BOARD
MC	MISCELLANEOUS CHANNEL
MCC	MOTOR CONTROL CENTER
MCM	ONE THOUSAND CIRCULAR MILS
MDO	MEDIUM DENSITY OVERLAY
MDP	MAIN DISTRIBUTION PANEL
MECH	MECHANICAL
MED	MEDIUM, MEDICINE
MET	METAL
MFR	MANUFACTURER
MH	MANHOLE
MIN	MINIMUM
MISC	MISCELLANEOUS
ML & P	METAL LATH AND PLASTER
MMB	MEMBRANE
MO	MASONRY OPENING
MS	MOP SINK
MSB	MAIN SWITCHBOARD
MTD	MOUNTED
MTG	MOUNTING
MTR	MOTOR
MULL	MULLION
N	
N/A	NOT APPLICABLE
NEC	NECESSARY
NEUT	NEUTRAL
NIC	NOT IN CONTRACT
NO.	NUMBER. NORMALLY OPEN
NOM	NOMINAL
NTS	NOT TO SCALE
O	
OA	OUTSIDE AIR
OBSC	OBSCURE
OC	ON CENTER
OD	OUTSIDE DIAMETER
OFD	OVERFLOW DRAIN
OH	OPPOSITE HAND, OVERHEAD
OLF	OUTSIDE LIGHTING FIXTURE
OPNG	OPENING
OPP	OPPOSITE
ORD	OVERFLOW ROOF DRAIN
P	
PARTN	PARTITION
PART BD	PARTICLE BOARD
PASS	PASSAGE
PC	PRECAST
P/C	POURED CONCRETE
PE	PHOTOELECTRIC EYE
PEMB	PRE-ENGINEERED METAL BUILDING
PERF	PERFORATED
PERIM	PERIMETER
PERP	PERPENDICULAR
PF	POWER FACTOR
PH, P	PHASE
PIV	POST INDICATOR VALVE
PLAS	PLASTER
PLAM	PLASTIC LAMINATE
PLBG	PLUMBING
PLYWD	PLYWOOD
PNEU	PNEUMATIC
POL	POLISHED
POLY CARB	POLYCARBONATE SHEET
PREFAB	PREFABRICATED
PRI	PRIMARY
PROJ	PROJECT, PROJECTED
PPG	POLISHED PLATE GLASS
PR	PAIR
PRV	PRESSURE REDUCING VALVE, PRESSURE RELIEF VALVE
PS	PRESSURE SWITCH
PT	POINT
PTW	PRESSURE TREATED WOOD
PTRV	PRESSURE & TEMPERATURE RELIEF VALVE
PU	PUMP
PVC	POLYVINYL CHLORIDE
PVMT	PAVEMENT
PWG	POLISHED WIRE GLASS
Q	
QT	QUARRY TILE
R	
RIS, R	RISER
RAD, R	RADIUS
RA	RETURN AIR
RCP	REINFORCED CONCRETE PIPE
RCVR	RECEIVER
RD	ROOF DRAIN
REBAR	REINFORCING BAR
RECIRC	RECIRCULATE
RECP(S)	RECEPTACLE(S)
RECT	RECTIFIER
REF	REFERENCE
REFR	REFRIGERATOR
REG	REGISTER
REINF	REINFORCE
REQD	REQUIRED
RET	RETAINING, RETURN
RESIL	RESILIENT
REV	REVISE, REVISION
RF	RETURN FAN
RH	RIGHT HAND, ROUND HEAD
RHEO	RHEOSTAT
RL	ROOF LEADER
RO	ROUGH OPENING
ROW, R/W	RIGHT OF WAY
RTU	ROOF TOP UNIT
RVCP	REINFORCED VITRIFIED CLAY PIPE
RV	RELIEF VALVE
RVD	RELIEF VALVE DISCHARGE
S	
S	SINK
SA	SUPPLY AIR
SB	SMART BOARD
SC	SOLID CORE, SILL COCK, SELF CLOSING
SCHED	SCHEDULE
SCR	SILICON CONTROLLED RECTIFIER
SEC	SECONDARY
SECT	SECTION, SECTIONAL
SEP	SEPARATE
SF	SUPPLY FAN
SHR	SHOWER
SHT	SHEET
SHEATH	SHEATHING
SIM	SIMILAR
SM	SHEET METAL
SN	SOLID NEUTRAL
SOL	SOLENOID
SPA	SPACES
SPEC(S)	SPECIFICATION(S)
SPKR	SPEAKER
SQ	SQUARE
SS	STAINLESS STEEL
S-T	SMOKE-TIGHT
STA	STATION
STD	STANDARD
STL	STEEL
STO	STORAGE
STRUCT	STRUCTURAL
SUB	SUBSTITUTE
SUCT	SUCTION
SUSP	SUSPENDED
SW	SWITCH
SWBD	SWITCHBOARD
SYMM	SYMMETRICAL
SYS	SYSTEM
T	
T	TREAD, TOP
TB	TACK BOARD
TC	TOP OF CURB, TERRA COTTA
TCE	TOP OF CURB ELEVATION
TDS	TURNED DOWN SLAB
TEL	TELEPHONE
TERR	TERRAZZO
TFE	TOP OF FOOTING ELEVATION
T&G	TONGUE AND GROOVE
THK	THICK, THICKNESS
THRESH	THRESHOLD
TKBD	TACKBOARD
TOC	TOP OF CONCRETE
TOIL	TOILET
TOPG	TOPPING
TOS	TOP OF STEEL
TRMT	TREATMENT
TS	THICK SLAB, STRUCTURAL STEEL TUBING, TAMPER SWITCH
TSTAT	THERMOSTAT
TTC	TELEPHONE TERMINAL CABINET
TOW	TOP OF WALL
TV	TELEVISION
TVSS	TRANSIENT VOLTAGE SURGE SUPPRESSION
TYP	TYPICAL
U	
UG	UNDERGROUND
UH	UNIT HEATER
UNFIN	UNFINISHED
UNO	UNLESS NOTED OTHERWISE
UR	URINAL
UV	UNIT VENTILATOR
V	
V	VOLT
VAC	VACUUM, VOLTS ALTERNATING CURRENT
VAP BARR	VAPOR BARRIER
VCT	VINYL COMPOSITION TILE
VCP	VITRIFIED CLAY PIPE
VDC	VOLTS DIRECT CURRENT
VENT	VENTILATE
VERT	VERTICAL
VEST	VESTIBULE
VERMIC	VERMICULITE
VTR	VENT THRU ROOF
W	
W	WIDE, WATTS
W/	WITH
WC	WATER CLOSET
WD	WOOD, WINDOW DIMENSION
WDW	WINDOW
WH	WEEP HOLE, WALL HYDRANT, WATER HEATER
WHA	WATER HAMMER ARRESTOR
WI	WROUGHT IRON
WP	WATERPROOFING, WEATHERPROOF, WHITE PINE
WR	WATER RESISTANT
WAIN	WAINSCOT
WV	WALL VENT
WWF	WELDED WIRE FABRIC
X	
X	BY
XFMR	TRANSFORMER
Y	
YD	YARD, YARD DRAIN
YH	YARD HYDRANT

ANNOTATION AND SYMBOLS

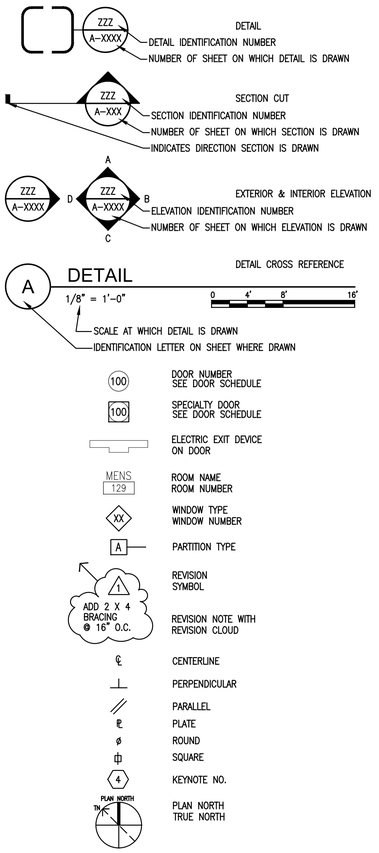

GENERAL NOTES

1. DIMENSIONING: ALL DIMENSIONS ARE TO FINISH FACE OF GYP BOARD FINISH, FACE OF MASONRY, OR TO THE CENTERLINE OF STRUCTURAL STEEL UNLESS NOTED OTHERWISE.
2. ALL ABBREVIATIONS, SYMBOLS AND OTHER INFORMATION ON THIS SHEET MAY NOT NECESSARILY HAVE BEEN USED ON THIS PROJECT. THEY SHALL, HOWEVER, APPLY TO THIS PROJECT WHERE THEY ARE FOUND TO OCCUR.
3. ALL SCHEDULES CALLING OUT COMPASS ORIENTED WALLS ARE BASED ON "PLAN NORTH" AND NOT TRUE NORTH.
4. DO NOT SCALE DRAWINGS.
5. DIMENSIONS AND CONDITIONS ARE TO BE FIELD VERIFIED BY THE GENERAL CONTRACTOR PRIOR TO CONSTRUCTION OR ORDER OF MATERIALS. ANY REVISIONS, CHANGES, DEVIATIONS, OR INCONSISTENCIES SHALL IMMEDIATELY BE REPORTED TO THE OWNER AND THE ARCHITECT BEFORE CONSTRUCTION.
6. IT IS THE RESPONSIBILITY OF THE GENERAL CONTRACTOR TO CROSS-CHECK THE M.E.P. DRAWINGS WITH THE ARCHITECTURAL DRAWINGS PRIOR TO THE ORDERING/INSTALLATION OF MECHANICAL, ELECTRICAL, AND PLUMBING WORK. ANY DISCREPANCIES BETWEEN THE ARCHITECTURAL AND M.E.P. DRAWINGS SHALL BE BROUGHT TO THE ARCHITECTS' ATTENTION FOR IMMEDIATE CLARIFICATION.
7. ALL CONSTRUCTION SHALL COMPLY WITH ALL APPLICABLE STATE, CITY, AND LOCAL CODES AND ORDINANCES AT THE LOCATION OF THE PROJECT.
8. APPROVED FIRE EXTINGUISHERS SHALL BE LOCATED PER FIRE MARSHALL REQUIREMENTS.
9. PROVIDE FIRE TREATED IN-WALL BLOCKING OR BACKING.
10. ELECTRICAL DRAWINGS SHOW APPROXIMATE LOCATIONS OF OUTLETS. AT ANY CONFLICTS WITH EXISTING WALL CONDITIONS, OWNER TO DETERMINE OUTLET OPTIONS AS PER CODE ALSO ALLOWS.

MATERIALS

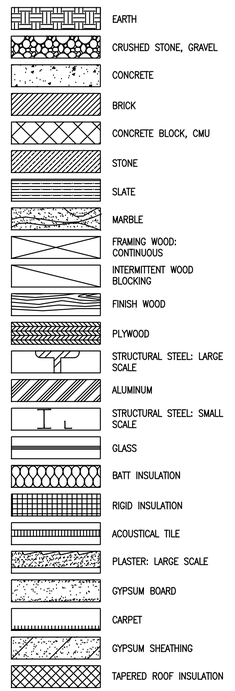

SHEET NUMBERING

A	Architectural
C	Civil
D	Process
E	Electrical
F	Fire Protection
G	General
I	Interiors
M	Mechanical
P	Plumbing
Q	Equipment
S	Structural
X	Other
0	General (symbols legend, notes, etc)
1	Plans (horizontal views)
2	Elevations (vertical exterior views)
3	Sections (building sectional views)
4	Large Scale Views (plans, interior elevations, & sections that are not details)
5	Details
6	Schedules and Diagrams
7	User Defined
8	User Defined

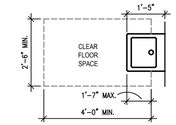

NOTE: HOT WATER AND DRAIN PIPES UNDER LAVATORIES SHALL BE INSULATED OR OTHERWISE CONFIGURED TO PROTECT AGAINST CONTACT PER ICC/ANSI 117.1-2009 606.6.

1 G1.02 DRINKING FOUNTAIN FLOOR CLEARANCE
1/2" = 1'-0"

THE ACCESSIBLE HI-LO DRINKING FOUNTAIN MEETS ALL OF THE REQUIREMENTS PER ICC/ANSI A117.1-2009.

AT THE LO FOUNTAIN ACCESSIBLE DRINKING FOUNTAIN, A CLEAR FLOOR SPACE COMPLYING WITH SECTION 305, POSITIONED FOR A FORWARD APPROACH SHALL BE PROVIDED. KNEE AND TOE SPACE COMPLYING WITH SECTION 306 SHALL BE PROVIDED. THE CLEAR FLOOR SPACE SHALL BE CENTERED ON THE LO DRINKING FOUNTAIN.

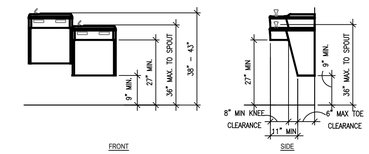

2 G1.02 DRINKING FOUNTAIN MOUNTING HEIGHT / CLEARANCES
1/2" = 1'-0"

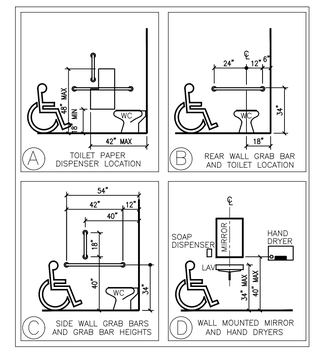

3 G1.02 TOILET ACCESSORIES ADA MOUNTING HEIGHTS
1/2" = 1'-0"

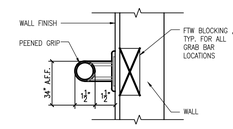

4 G1.02 TOILET ACCESSORY GRAB BAR MOUNTING DETAIL
1/2" = 1'-0"

1. THRESHOLDS SHALL NOT EXCEED 1/2" IN HEIGHT & BEVELED @ 1:2 MAX PER ICC/ANSI SECTION 404.2.4.
2. ALL HANDLES, PULLS, LATCHES, LOCKS, ETC. SHALL BE LEVER TYPE
3. IF A DOOR HAS A CLOSER, THE SWEEP SHALL BE ADJUSTED SO THAT FROM AN OPEN POSITION OF 90 DEGREES, THE DOOR WILL TAKE AT LEAST 5 SECONDS TO MOVE TO AN OPEN POSITION OF 12 DEGREES PER ICC/ANSI SECTION 404.2.7. MAXIMUM FORCE ON EXTERIOR DOOR SHALL BE 8.5 LBS AND INTERIOR DOORS 5 LBS., PER ICC/ANSI 404.2.8
4. FLOOR / LANDING SHALL BE AT THE SAME ELEVATION ON EACH SIDE OF THE DOOR.

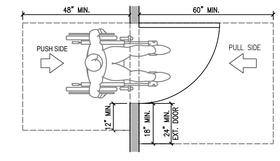

5 G1.02 ACCESSIBLE DOOR CLEARANCE
1/2" = 1'-0"

CMW The Shape of Ideas
Architecture
Civil Engineering
Landscape Architecture
a: 249 East Main Street
Suite 100
Lexington, Kentucky 40507
o: (859) 254-6623
w: www.cmwaec.com

BILL PICKERING REGISTERED No. 4915 COMMONWEALTH OF KENTUCKY ARCHITECT
01 AUGUST 2025

ABBREVIATIONS, SYMBOLS, GENERAL INFORMATION

DISTRIBUTION CENTER II - PHASE I
NEWCOMB OIL CO., LLC
951 WITHROW CT.
BARDSTOWN, KY 40004

PERMIT DOCUMENTS

Issue Date:	AUGUST 1, 2025
Drawn By:	JTH/JMT
Checked By:	BP
Revisions:	
Mark	Date

AHJ SEAL

Project Number
25011.01

G1.02

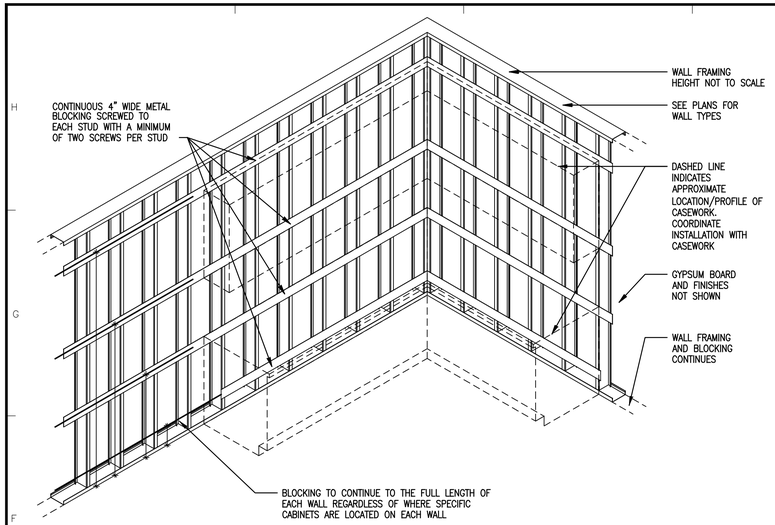

1 / G1.03 TYPICAL STUD FRAMING @ WALL MOUNTED CASEWORK
1/4" = 1'-0"

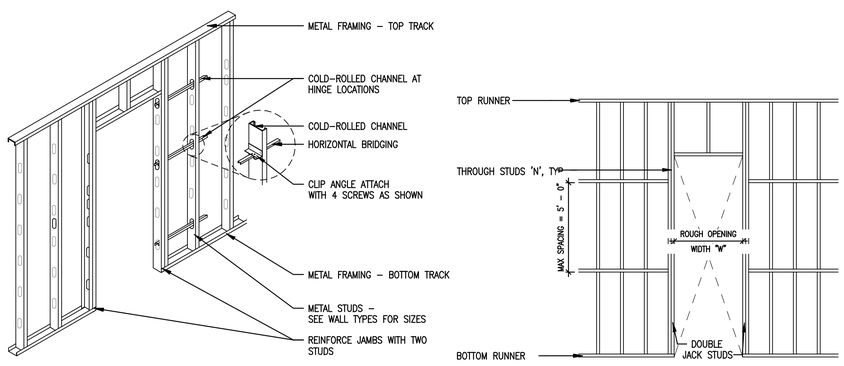

2 / G1.03 TYPICAL STUD FRAMING @ DOOR OPENING
1/4" = 1'-0"

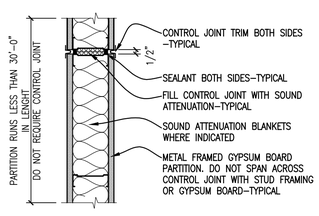

3 / G1.03 TYPICAL CONTROL JOINT
1 1/2" = 1'-0"

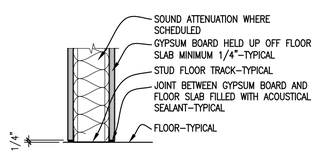

4 / G1.03 TYPICAL BOTTOM OF WALL
1 1/2" = 1'-0"

Wall / Partition Type General Notes

THESE GENERAL NOTES APPLY TO THE EXTERIOR WALL AND INTERIOR PARTITION TYPES

A. REFER TO GENERAL INFORMATION DRAWING G1.01 AND THIS SHEET FOR CODE INFORMATION APPLICABLE TO PARTITIONS

B. PARTITIONS DESIGNATED WITH FIRE RATING INSTALLED IN COMPLIANCE WITH 'UL' LISTED ASSEMBLY

C. ALL METAL FRAMING FOR FRAMED DOOR OPENINGS INCLUDING HEADER, DOUBLE JAMB STUDS AND CRIPPLE STUDS TO BE 16–GAUGE – TYPICAL

D. GYPSUM BOARD TO BE 5/8" TYPE–X UNLESS NOTED OTHERWISE AND TO BE INSTALLED VERTICAL TYPICAL UNLESS NOTED OR REQUIRED OTHERWISE

E. REFER TO, INCLUDING BUT NOT LIMITED TO, WALL SECTIONS, WALL SECTION DETAILS, INTERIOR DETAILS, DOOR AND WINDOW DETAILS AND TECHNICAL SPECIFICATIONS FOR ADDITIONAL REQUIREMENTS APPLICABLE TO PARTITIONS

F. PRIOR TO APPLICATION OF GYPSUM BOARD AT METAL FRAMED PARTITIONS, OBTAIN FRAMING INSPECTION APPROVAL FROM AUTHORITIES HAVING JURISDICTION

G. REFER TO DRAWING G1.03 FOR TYPICAL DETAILS 1 THROUGH 4 THAT APPLY TO PARTITION ASSEMBLIES

H. PARTITIONS AND HORIZONTAL ASSEMBLY WITH FIRE RATING TO HAVE STUD CAVITIES FILLED WITH MINERAL WOOL ATTENUATION FIRE BLANKET (SAFB) IN THICKNESS MATCHING STUD DEPTH. REFER TO DETAILS OF 1–HR FIRE RATED PARTITIONS AND HORIZONTAL ASSEMBLY.

I. STUD FRAMING FOR 1–HR FIRE–RATED FIRE PARTITION TO BE 16 GAUGE METAL STUDS AND TRACK OF SIZE INDICATED.

J. JOIST FRAMING FOR 1–HR FIRE–RATED HORIZONTAL ASSEMBLY TO BE 16 GAUGE 6" METAL STUDS AND TRACK

Wall / Partition Types

PLAN TAG	DETAIL	DESCRIPTION
A TYP UNO		5/8" TYPE–X GYPSUM BOARD EA. SIDE 3 5/8" 16GA STRUCTURAL METAL STUDS SPACED @ 16"OC
B TYP UNO	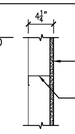	5/8" TYPE–X GYPSUM BOARD 3 5/8" 16GA STRUCTURAL METAL STUDS SPACED @ 16"OC
C TYP UNO	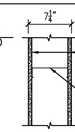	5/8" TYPE–X GYPSUM BOARD EA. SIDE 6" 16GA STRUCTURAL METAL STUDS SPACED @ 16"OC
D TYP UNO	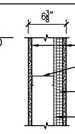	5/8" TYPE–X GYPSUM BOARD EA. SIDE 3 5/8" 16GA STRUCTURAL METAL STUDS SPACED @ 16"OC 1" RIGID INSULATION (R5) ON WAREHOUSE SIDE ONLY 1/2"(T) PLYWOOD SHEATHING – SEE STRUCTURAL
E TYP UNO	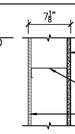	5/8" TYPE–X GYPSUM BOARD 6" 16GA STRUCTURAL METAL STUDS SPACED @ 16"OC 1/2"(T) PLYWOOD SHEATHING – SEE STRUCTURAL
F TYP UNO	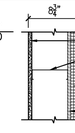	5/8" TYPE–X GYPSUM BOARD EA. SIDE 6" 16GA STRUCTURAL METAL STUDS SPACED @ 16"OC 1" RIGID INSULATION (R5) ON WAREHOUSE SIDE ONLY 1/2"(T) PLYWOOD SHEATHING – SEE STRUCTURAL
G TYP UNO	1–HR FIRE RATED WALL UL DESIGN U419 (1–HR) 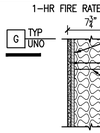	1/2"(T) PLYWOOD SHEATHING – SEE STRUCTURAL 5/8" TYPE–X GYPSUM BOARD EACH SIDE OF RATED ASSEMBLY 6" 16GA STRUCTURAL METAL STUDS SPACED @ 16"OC [C1] 6" MINERAL WOOL ATTENUATION FIRE BLANKET (SAFB) IN STUD CAVITY
G1 TYP UNO	1–HR FIRE RATED WALL UL DESIGN U419 (1–HR) 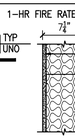	5/8" TYPE–X GYPSUM BOARD EACH SIDE OF RATED ASSEMBLY 6" 16GA STRUCTURAL METAL STUDS SPACED @ 16"OC [C1] 6" MINERAL WOOL ATTENUATION FIRE BLANKET (SAFB) IN STUD CAVITY
H TYP UNO	1–HR FIRE RATED WALL UL DESIGN U419 (1–HR) 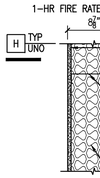	5/8" TYPE–X GYPSUM BOARD EA. SIDE OF RATED ASSEMBLY AND WAREHOUSE FINISH FACE 1/2"(T) PLYWOOD SHEATHING – SEE STRUCTURAL 6" 16GA STRUCTURAL METAL STUDS SPACED @ 16"OC 1" RIGID INSULATION (R5) ON WAREHOUSE SIDE ONLY [C1] 6" MINERAL WOOL ATTENUATION FIRE BLANKET (SAFB) IN STUD CAVITY
I TYP UNO	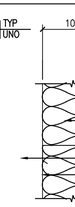	PEMB EXT. 2" INSUL WALL PANEL R–19 BATT INSULATION PEMB 8" GIRT PEMB COLUMN BEYOND SMOOTH CLEANABLE WALL PANELS
J TYP UNO	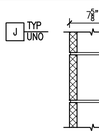	(NOM.) 8" CMU

1–HR FIRE–RATED HORIZONTAL ASSEMBLY
BASED ON UL DESIGN U419 (1–HR)

REFER TO SECTION FOR DETAILS OF HORIZONTAL ASSEMBLY

NOTE: HORIZONTAL ASSEMBLY IS NON–LOAD BEARING

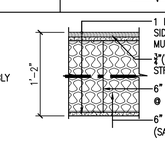

CMW The Shape of Ideas
Architecture
Civil Engineering
Landscape Architecture
a: 249 East Main Street
Suite 100
Lexington, Kentucky 40507
o: (859) 254-6823
w: www.cmwaec.com

BILL PICKERING REGISTERED No. 4915 COMMONWEALTH OF KENTUCKY ARCHITECT
01 AUGUST 2025

PARTITION TYPES & NOTES & TYPICAL DETAILS

DISTRIBUTION CENTER II - PHASE I
NEWCOMB OIL CO., LLC
951 WITHROW CT.
BARDSTOWN, KY 40004

PERMIT DOCUMENTS

Issue Date:	AUGUST 1, 2025
Drawn By:	JTH/JMT
Checked By:	BP
Revisions:	

Mark	Date

AHJ SEAL

Project Number
25011.01

G1.03

STRUCTURAL QUALITY ASSURANCE PLAN

GENERAL

THE NEW STRUCTURE TO BE CONSTRUCTED IS ASSIGNED BY THE KENTUCKY BUILDING CODE, 2018 EDITION, TO SEISMIC USE GROUP AND SEISMIC DESIGN AS SPECIFIED. AS SUCH, THE BUILDING CODE MANDATES SPECIAL INSPECTION (SECTION 1704), SPECIAL INSPECTIONS FOR WIND RESISTANCE (SECTION 1705.11). SPECIAL INSPECTIONS FOR SEISMIC RESISTANCE (SECTION 1705.12). STRUCTURAL OBSERVATION FOR SEISMIC RESISTANCE (SECTION 1704.6.1) AND STRUCTURAL OBSERVATIONS FOR WIND REQUIREMENTS (SECTION 1704.6.2). STRUCTURAL QUALITY ASSURANCE PLAN SPECIFICALLY IDENTIFIES THE RESPONSIBILITIES OF THE CONTRACTOR AND THE SPECIAL INSPECTOR IN PERFORMING THE REQUIRED TESTING AND INSPECTION OF THE STRUCTURAL WORK.

CONTRACTOR RESPONSIBILITIES

In accordance with Section 1704.4 of the Building Code, the Contractor shall submit to the Building Official and the Architect a written statement of responsibility that contains the following:

1. Acknowledgement of awareness of the special requirements contained within this Structural Quality Assurance Plan.
2. Acknowledgement that control shall be exercised to obtain conformance with the construction documents approved by the Building Official.
3. Procedures for exercising control with the Contractor's organization, the method and frequency of reporting, and the distribution of reports.
4. Identification and qualifications of the person(s) exercising such control and their position(s) in the organization.

The Structural Testing/Inspection Agency that is to act as the Special Inspector will be hired by the Owner.

Contractor shall pay for any additional structural testing/inspection required for work or materials not complying with the Construction Documents due to negligence or nonconformance and shall pay for any additional structural testing/inspection required for his convenience.

The Contractor is responsible to ensure that the Special Inspector is present for all work requiring special inspection. Any work that requires special inspection and is performed without the Special Inspector being present is subject to being demolished and reconstructed.

The Contractor has the following responsibilities to the Special Inspector:

1. Provide copy of Construction Documents to the Special Inspector.
2. Notify the Special Inspector sufficiently in advance of operations to allow assignment of personnel and scheduling of tests.
3. Cooperate with Special Inspector and provide access to work.
4. Provide samples of materials to be tested in required quantities.
5. Provide storage space for the Special Inspector's exclusive use, such as for storing and curing concrete testing samples.
6. Provide labor to assist the Special Inspector in performing tests/inspections.

SPECIAL INSPECTOR RESPONSIBILITIES

The Special Inspector shall maintain records of inspections in accordance with Section 1704.2.4 and shall distribute these records to the Architect and Structural Engineer on a weekly basis. At the conclusion of the project, the Special Inspector shall submit a written statement that the special inspections during construction have complied with this Structural Quality Assurance Plan and that any discrepancies noted during construction have been corrected.

SOILS & ROCK BEARING

The Special Inspector shall perform the following:

1. Verify structural fill complies with specifications and the geotechnical report.
2. Observe proof-rolling.
3. Perform field density tests to verify compaction of structural fill. As a minimum, perform one test per lift for every 2500 square feet of fill placed.
4. Inspect footing trenches & ensure proper bearing on rock & conc. fill to rock per geotechnical report and specifications.

NON-SHRINK GROUT UNDER STEEL BASE PLATES

The Special Inspector shall perform the following:

1. Compressive strength tests per ASTM C109.
2. Number of Tests: One test for each ten bags of grout used or minimum of one test for each day of grouting.
3. Cube Size: 2-inch x 2-inch.
4. Test Schedule: One cube at 3 days, two cubes at 7 days, three cubes at 28 days.

CAST-IN-PLACE CONCRETE

The Contractor shall perform the following:

1. Establish concrete mix design proportions per ACI 318, Chapter 5. Submit (5) copies of concrete mix designs. Include the following:

   a. Type and quantities of materials
   b. Slump
   c. Air content
   d. Fresh unit weight
   e. Aggregates sieve analysis
   f. Design compressive strength
   g. Location of placement in structure
   h. Method of placement
   i. Method of curing
   j. Seven-day and 28-day compressive strengths

2. Submit a certification from each manufacturer or supplier stating that materials meet the requirements of the specified ASTM and ACI standards.
3. Submit certification that the ready-mixed concrete plant complies with the requirements of the National Ready Mix Concrete Association.

The Special Inspector shall perform the following:

1. Verify quantity, location, and placement of reinforcing steel prior to concrete placement.
2. Examine concrete in truck to verify that concrete appears properly mixed.
3. Perform a slump test as deemed necessary for each concrete load. Record if water or admixtures are added to the concrete at the job site. Perform additional slump tests after job site adjustments.
4. Mold four specimens per set for compressive strength testing; one set for each 50 cubic yards (or portion thereof) of each mix design in any one day. For each set set molded, record:

   a. Slump
   b. Air content
   c. Unit weight
   d. Temperature, ambient and concrete
   e. Location of placement
   f. Any pertinent information, such as addition of water, addition of admixtures, etc.

5. Perform one 7-day and two 28-day compressive strength tests. (Use one as a spare to be broken as directed by the Structural Engineer if compressive strengths do not appear adequate.)
6. Reports of compressive strength tests shall contain the project identification name and number, date of concrete placement, concrete design compressive strength, location of concrete placement in structure, concrete mix proportions and materials, compressive breaking strength and type of break.

CONCRETE MASONRY

Contractor shall perform the following:

1. Submit a certification from each manufacturer or supplier stating that the following materials comply with the specified ASTM or ACI Standards:

   a. Concrete masonry units.
   b. Mortar materials: Portland cement, hydrated lime, and aggregates.
   c. Grout materials: Portland cement and aggregates.
   d. Joint reinforcement steel.
   e. Reinforcing steel.

2. For reinforcing steel used in concrete masonry walls, submit certified mill test reports.

Special Inspector shall perform the following:

1. Verify compressive strength of concrete masonry units, mortar, and coarse grout for every 5,000 sq. ft. of surface area (or portion thereof) as follows:

   a. Three (3) concrete masonry units shall be tested in accordance with ASTM C140.

   b. Six (6) mortar cube specimens shall be tested, three (3) at 7-days and three (3) at 28-days, in accordance with ASTM C109.

   c. Four (4) coarse grout specimens shall be tested, two (2) at 7-days and two (2) at 28-days, in accordance with ASTM C-109.

   d. In lieu of individual tests of masonry units, mortar, and grout, perform one (1) prism test (which consists of three prisms) in accordance with ASTM E447.

2. Provide continuous inspection to verify compliance of the following:

   a. Cleanliness of grout space prior to grouting.
   b. Placement of grout in reinforced cells.
   c. Preparation of required grout and mortar specimens.
   d. Welding of reinforcing bars.

3. Provide periodic inspection to verify compliance of the following:

   a. Proportions of site-prepared mortar or grout.
   b. Construction of mortar joints.
   c. Quantity, size, location, and support of reinforcing steel.
   d. Quantity, size, and placement of horizontal joint reinforcement.
   e. Type, size and location of anchors.
   f. Protection of masonry during cold or hot weather.

STRUCTURAL STEEL

The Contractor shall perform the following:

1. The steel fabricator shall be AISC or AWS Certified, refer to Spec. 05120.
2. Submit certified mill test reports for structural steel.
3. Submit manufacturer's certificate of compliance fro high-strength bolting and weld filler materials.

** If the fabricator is not certified, then the fabricator shall reimburse the owner for the costs of these tests.

The Special Inspector shall perform the following:

1. Provide continuous inspection to verify compliance of the following:

   a. Inspection of slip-critical connections, except periodic inspection may be performed when using torque control bolts (twist off)
   b. Complete and partial penetration groove welds. Ultrasonically inspect 100% of the complete penetration welds.
   c. Multi-pass fillet welds and single-pass fillet welds greater than 5/16".

2. Provide periodic inspection to verify compliance of the following:

   a. Material verification of high-strength bolts, nuts, and washers.
   b. Material verification of structural steel.
   c. Material verification of weld filler material.
   d. Anchor bolt size, configuration, and embedment shall be verified prior to placement of concrete.
   e. Visually inspect all field-welded connection. Visual inspection of welded joints includes periodic examination of fitup.
   f. Verify stud shear connector spacing and location. Visually inspect welding of stud shear connectors.

3. Weld Inspections:

   a. Weld inspections shall be in accordance with AWS D1.1.
   b. Review and verify compliance of written welding procedures with AWS requirements.
   c. Verify that welding procedures are being adhered to during field welding.
   d. Verify welder qualifications.
   e. Use all means necessary to determine the quality of welds. The inspector may use gamma ray, magnafluz, trepanning, sonics or any other aid to visual inspection that the Special Inspector may deem necessary to be assured of the adequacy of the welding.
   f. Keep a systematic record of all welds that include, in addition to other required records, the identification marks of welders, a list of defective welds, and the manner of correcting defects.

4. Bolting inspection and testing shall be in accordance with AISC Specifications for Structural Joints Using ASTM A325 or A490 Bolts.

SPECIAL INSPECTIONS PER CHAPTER 17 OF THE KENTUCKY BUILDING CODE

SECTION	ITEM	REQUIRED? YES	REQUIRED? NO	REMARKS
1704.2.5	FABRICATORS	X		STEEL FABRICATION SPECIAL INSPECTION IS REQUIRED IF THE FABRICATOR IS NOT A.I.S.C. OR AWS CERTIFIED.
1704.6.1	STRUCTURAL OBSERVATION FOR SEISMIC REQUIREMENTS		X	SEISMIC DESIGN CATEGORY "B"
1704.6.2	STRUCTURAL OBSERVATION FOR WIND REQUIREMENTS		X	Vasd = 89mph
1705.2	STEEL	X		PER AISC 360 & TABLE 1705.2.2
1705.3	CONCRETE	X		PER TABLE 1705.3
1705.4	MASONRY	X		LEVEL B TMS 402/ACI 530/ASCE 5
1705.5	WOOD		X	PER SECTION 1705.5
1705.6	SOILS	X		PER TABLE 1705.6
1705.7	DRIVEN DEEP FOUNDATIONS		X	NONE
1705.8	CAST IN PLACE DEEP FOUNDATIONS		X	NONE
1705.9	HELICAL PILE FOUNDATIONS		X	NONE
1705.11.1	WIND – STRUCTURAL WOOD		X	Vasd = 93mph
1705.11.2	WIND – COLD FORMED STEEL FRAMING		X	NONE
1705.11.3	WIND – WIND RESISTING COMPONENTS		X	NONE
1705.12.1	SEISMIC – STRUCTURAL STEEL		X	SEISMIC DESIGN CATEGORY "B"
1705.12.2	SEISMIC – STRUCTURAL WOOD		X	PER SECTION 1705.12.2
1705.12.3	SEISMIC – COLD FORMED STEEL FRAMING		X	NONE
1705.12.4	DESIGNATED SEISMIC SYSTEMS		X	PER SECTION 1705.12.4
1705.12.5	SEISMIC – ARCHITECTURAL COMPONENTS INTERIOR/EXTERIOR NON-LOAD BEARING WALLS & VENEER IN STRUCTURES		X	SEISMIC DESIGN CATEGORY "B"
1705.12.6	SEISMIC – MECHANICAL & ELECTRICAL COMPONENTS		X	SEISMIC DESIGN CATEGORY "B"
1705.12.7	SEISMIC – STORAGE RACKS & ACCESS FLOORS		X	SEISMIC DESIGN CATEGORY "B"
1705.14	SPRAYED FIREPROOFING		X	1705.14
1705.15	FIREPROOFING		X	1705.15
1705.16	E.I.F.S.		X	PER SECTION 1705.16
1705.17	FIRE RESISTANT PENETRATIONS & JOINTS		X	NONE
1705.18	SMOKE CONTROL		X	NONE

EARTHQUAKE DESIGN DATA

RISK CATEGORY	II
IMPORTANCE FACTOR	1.0
S_s	0.192
S_1	0.104
SITE CLASS	B
S_{DS}	0.154
S_{D1}	0.117
SEISMIC DESIGN CATEGORY	B
BASIC SEISMIC-FORCE RESISTING SYSTEM	BY PEMB MANUFACTURER
DESIGN BASE SHEAR	BY PEMB MANUFACTURER
SEISMIC RESPONSE COEFFICIENT (C)	BY PEMB MANUFACTURER
RESPONSE MODIFICATION FACTOR	BY PEMB MANUFACTURER
ANALYSIS PROCEDURE	BY PEMB MANUFACTURER

WIND DESIGN DATA

ULTIMATE DESIGN WIND SPEED (V_{ult})	115 MPH
NOMINAL DESIGN WIND SPEED (V_{asd})	89 MPH
RISK CATEGORY	II
WIND EXPOSURE CATEGORY	B
INTERNAL PRESSURE COEFFICIENT	+/- 0.18

COMPONENTS AND CLADDING [H<30 FT]

	EXPOSURE B (PSF)	EXPOSURE C (PSF)
ROOF 0 TO 7 DEGREES		
INTERIOR ZONE	9.7 -23.8	13.5 -33.3
END ZONE	9.7 -39.9	13.5 -55.8
CORNER ZONE	9.7 -60.1	13.5 -84.1
ROOF >7 TO 27 DEGREES		
INTERIOR ZONE	13.7 -21.8	19.1 -30.5
END ZONE	13.7 -37.9	19.1 -50.0
CORNER ZONE	13.7 -56.0	19.1 -78.4
ROOF >27 TO 45 DEGREES		
INTERIOR ZONE	21.8 -23.8	30.5 -33.3
END ZONE	21.8 -27.8	30.5 -38.9
CORNER ZONE	21.8 -27.8	30.5 -38.9
WALLS		
INTERIOR ZONE	23.8 -25.8	33.3 -36.1
END ZONE	23.8 -31.9	33.3 -44.6

NOTE: NEGATIVE NUMBERS INDICATE A SUCTION/UPLIFT PRESSURE

SNOW DESIGN DATA

GROUND SNOW LOAD (P_g)	15 PSF
MINIMUM SLOPED ROOF SNOW LOAD (P_m)	15 PSF
FLAT ROOF SNOW LOAD (P_f)	15 PSF
IMPORTANCE FACTOR	1.0
THERMAL FACTOR (C_t)	1.1
SNOW EXPOSURE FACTOR (C_e)	0.9

DESIGN LIVE LOADS

ROOF	20 PSF
MEZZANINE	100 PSF
FLOOR	250 PSF

CMW The Shape of Ideas

Architecture
Civil Engineering
Landscape Architecture
a: 249 East Main Street
Suite 100
Lexington, Kentucky 40507
o: (859) 254-6623
w: http://www.cmwaec.com

POAGE ENGINEERS & ASSOCIATES
880 Sparta Court, Suite 200
Lexington, KY 40507
Phone: (859) 255-9034
Fax: (859) 252-3130

STATE OF KENTUCKY BRIAN D. SOLTE 21768 LICENSED PROFESSIONAL ENGINEER
8/1/2025

STRUCTURAL NOTES

Distribution Center - Phase 1
NEWCOMB OIL CO. LLC
2590 US-150
BARDSTOWN, KY 40004

DOCUMENT PHASE

Issue Date:	August 1, 2025
Drawn By:	HMM
Checked By:	BDS

Revisions:

Mark	Date

AHJ SEAL

Project Number
24030

S001

POAGE/24030/08.01.2025/hmm

GENERAL NOTES

GENERAL

1. Reference to standards or specifications of technical societies, organizations, or associations, or to codes of local/state authorities, means the latest standard, specification, or code adopted by the date shown on the Drawings, unless specifically noted otherwise.

2. Material, workmanship, and design shall conform to the referenced Building Code.

3. For dimensions not shown in the Structural Drawings, see the Architectural Drawings.

4. Contractor responsibilities include, but are not limited to, the following:

   4.1 Contractor is responsible for obtaining all contract documents and latest addenda, as well as, submitting to all subcontractors and suppliers prior to submitting shop drawings.

   4.2 Coordinate the Structural Documents with the Architectural, Mechanical, Electrical, Plumbing, and Civil Documents. Architect/Structural Engineer shall be notified of any discrepancy or omission.

   4.3 Compare all contract drawings and report any discrepancies between disciplines, and within a given discipline, to the architect and engineer prior to fabrication and erection.

   4.4 If a conflict exists among the structural drawings, general notes, the strictest requirements, as indicated by the engineer, governs.

   4.5 The structure is stable only in its completed form. Temporary supports required for stability during all intermediate stages of construction shall be designed, furnished, and installed by the Contractor.

   4.6 The completed lateral-force resisting systems (LFRS), including the diaphragms, are required to resist lateral loads and provide stability under gravity loads. During construction, the contractor is responsible for all bracing during construction to maintain the stability and safety of all structural elements until the lateral-load resisting or stability-providing system is completely installed and the structure is completely tied together.

   4.7 Contractor has sole responsibility for job site safety and complying with all health and safety precautions as required by any regulatory agency. In performing construction observation visits to the job site, for the Contractor's means, methods, sequences, techniques, or procedures in performing the work.

5. Contractor shall field verify all existing conditions, elevations, and site conditions prior to construction and fabrication. Contractor shall immediately notify Structural Engineer of any existing conditions that are in conflict with the Structural Documents.

6. Do not scale drawings or auto-dimension electronic files. notify architect and engineer of any discrepancies in writing prior to fabrication or construction.

7. Coordinate all elevations and dimensions, including but not limited to, openings in walls and in roof and floor systems, with the architectural, plumbing, electrical, and mechanical plans.

8. Verify all dimensions, elevations, and any other existing conditions. notify the architect and engineer of discrepancies before proceeding with the affected part of the work. During the construction process, it is the contractor's responsibility to maintain the integrity of the existing structure and to protect from damage any portions that remain. The shoring and bracing shown (if any) is a partial and schematic representation. Determine the erection procedure to ensure the stability and safety of the building and its components during construction.

9. Unless Noted Otherwise (U.N.O.) details shown are typical for all similar conditions.

10. Poage Engineers & Associates, Inc. is not responsible for acts or omission of the contractor, nor failure to perform work in accordance with the contract documents.

11. Periodic site observation by Poage Engineers & Associates, Inc. is for determining if the work is proceeding in accordance with the structural contract documents. Structural observations are not intended as quality control (contractor's responsibility), quality assurance (special inspector's responsibility), nor to confirm the quality or quantity of the work.

12. The building owner is responsible for periodic maintenance to ensure structural integrity. Maintenance includes, but is not limited to, steel/concrete coatings, sealants, caulked joints, expansion joints, control joints, spalls and cracks in concrete, and cleaning of exposed structural elements.

SUBMITTALS

1. Shop Drawings and Submittals
   1.1 Reproduction of Structural Drawings for shop drawings is not permitted.
   1.2 Electronic drawing files will not be provided to the Contractor.
   1.3 Review of shop drawings will be for conformance with the Construction.

2. Submittals
   Documents regarding arrangement and sizes of members and the Contractor's interpretation of the design loads, if applicable, and Construction Document details. Such review shall not relieve the Contractor of the full responsibility to comply with the Construction Documents.
   2.1 The Structural Quality Assurance Plan and Specifications identify the required submittals. Prior to (or with) the first submittal, Contractor shall submit a list of all required submittals for Engineer's review.

3. Deferred Submittals
   3.1 Deferred Submittals include those portions of the project that are furnished by the Contractor and designed by someone other than the Engineer of Record and are submitted at the time of the application. Deferred Submittals shall be submitted to the Building Official prior to fabrication and installation.

   3.2 Submittal documents for Deferred Submittals:
      3.2.1 Shall be included in the Contractor's scope of services and shall be sealed by an Engineer licensed in the project state. Design of Deferred Submittals shall be in accordance with the governing Building Code indicated above.

      3.2.2 Shall be submitted to the registered design professional in responsible charge who shall review them and forward them to the Building Official with a notation indicating the deferred submittal documents have been reviewed and that they have been found in general conformance with the design of the building. Deferred submittal items shall not be installed until the design and submittal documents have been approved by the Building Official.

   3.3 The following shall be considered Deferred Submittals:
      Precast Concrete Slab Units
      Shop Fabricated Trusses

NOTE TO CONTRACTOR:

The contractor shall coordinate the Structural Drawings with the Architectural, Mechanical, and Electrical Drawings and make certain all pipes, sleeves, ducts, inserts, and openings are located and in place before each concrete pour.

The Contractor shall verify all dimensions shown on the Structural Drawings with dimensions shown on the Architectural Drawings. The Contractor shall check and approve, with reasonable promptness, shop drawings and schedules for coordination of details, sizes, fitting tolerances, and dimensions. The Contractor shall stamp or sign these drawings and schedules with his approval and then submit them to the Architect for review.

SPECIAL INSPECTIONS AND TESTING

A. Special inspections and testing are performed in accordance with IBC Chapter 17 and local jurisdiction provisions, by an independent inspection and testing agency. The special inspector must observe and test the work for conformance to the contract documents.

B. The special inspector must furnish inspection reports to the building official, the engineer or architect of record, and all other designated individuals. All discrepancies must be brought to the attention of the contractor for correction, then, if not corrected, to the proper design authority and the building official.

C. The special inspector must submit a final signed report stating whether the work is, to the best of the inspector's knowledge, in conformance with the contract documents, soils report and applicable workmanship of the building code.

D. Statement and schedule of special inspections is part of the contract documents.

FOUNDATION DESIGN

1. Foundations were designed using an assumed bearing pressure capacity and should be field verified. Maximum rock bearing of 5,000 PSF or net soil bearing of 2,000 PSF using geotechnical report by Cornerstone Geotech Services dated April 4, 2025 (project #CGS-25-0063). This verification shall be performed by Licensed Geotechnical Engineer. Contractor shall review the geotechnical report and adhere to all recommendations within, including cut, subgrade preparation, fill, etc.

2. All soils work, including backfill of utility trenches and the verification of bearing capacity must be under the direction of a qualified geotechnical engineer. Proximity of utility trenches to building foundation system must be as approved by the geotechnical engineer to ensure integrity of the bearing soils.

3. All foundations bear on undisturbed earth or engineered fill at elevations shown on plans and details. Coordinate final top of footing elevations with the architectural elevations, MEP drawings and civil grading plans prior to placement. Foundation steps indicated are approximate, unless noted otherwise, and must be field coordinated. The bottom of exterior foundation elevations must be below the frost depth elevation of 24" minimum as measured from the exterior finished grade.

4. Bear floor slabs on 6" minimum drainage course (compacted stone) unless noted otherwise in the geotechnical report or drawings. Place the vapor retarder between the drainage course and the slab. Vapor retarder is ASTM E1745, Class B, 10 MIL unless noted otherwise. Place, protect and repair per ASTM E1643 and manufacturer's instructions.

5. Do not install foundation concrete until all foundation work has been coordinated with underground utilities. Notify the engineer of all conflicts between foundations and utilities.

6. All foundations, or portions thereof below grade, may be earth formed by neat excavations. Do not place foundations, slabs, or other concrete on frozen subgrade or in standing water.

7. Center all foundations on walls and/or columns, unless noted otherwise.

8. Determine the extent of construction dewatering required for the excavations. Submit the proposed construction dewatering plan to the geotechnical engineer for review prior to excavation.

9. Shallow rock may be encountered during footing excavation. If so over excavate a minimum depth as recommended in the geotechnical report.

10. Any removal of unsuitable soils shall be performed as described in the geotechnical report.

GRADE SUPPORTED FLOOR SLABS

1. The following features are required as part of grade support slab construction:

   A. Keep the crushed stone moist, but not wet, immediately prior to slab concrete placement to minimize curling of the slab due to differential curing conditions between the top and bottom of the slab.

   B. The Special Inspector shall review the actual subgrade conditions prior to slab construction and to make recommendations for any unsuitable conditions encountered.

   C. Slab subgrade conditions are also considered earthwork areas; thus, the recommendations contained in the Earthwork section of the report apply.

SHALLOW FOUNDATIONS ON SOIL

1. Any soils can lose strength if they become wet, so the foundation sub grades must be protected from exposure to water. Foundation construction the following procedures.

   a. For soils that will remain exposed overnight or for an extended period of time, place a "lean" concrete mud-mat over the bearing areas. The concrete should be at least 4 inches thick. Flowable fill concrete or low-strength concrete is suitable for this cover, as conditions allow.

   b. Disturbed soil must be removed prior to foundation concrete placement.

   c. Foundation bearing conditions must be benched level.

   d. Areas loosened by excavation operations must be re-compacted prior to reinforcing steel placement.

   e. Loose soil, debris, and excess surface water must be removed from the bearing surface prior to concrete placement.

   f. The Special Inspector shall observe all foundation excavations and provide recommendations for treatment of any unsuitable conditions encountered.

   g. The bearing conditions of foundation soils (stiff or better residual soil) shall be checked by means of portable dynamic cone penetration (DCP) testing at the direction of the special inspector.

CONCRETE

1. All concrete shall conform and be designed, mixed, placed, tested, and cured in accordance with the provisions of the ACI Manual of Concrete Practice, (current edition). Special care shall be taken in curing floors, stairs, walls, and other exposed surfaces in accordance with the specifications.

2. All concrete shall develop 4,000 PSI compressive strength in 28 days.

   A. W/C ratio, 0.45 for interior slabs and 0.46 for other concrete.

   B. Flyash substitution is only permitted in slabs with a 15% max. content. Flyash substitution is NOT permitted in foundations.

   C. Concrete structures and slabs exposed to freeze/thaw or subject to hydraulic pressure: air content 3% to 5%.

   D. Other concrete, air content 2% to 4%

   E. Slump limits (without a water reducer)
      - Ramps & sloping surfaces: no more than 3"
      - Reinforced foundations not less than 1" not more than 5"
      - Other concrete not less than 1" not more than 5"

3. Dropping the concrete in excess of 10 feet, depositing in a large quantity at any point and running or working it along the forms, or any method tending to cause segregation or separation of the aggregates will not be permitted.

4. Concrete must have allowable unit shrinkage of 0.045% at 28 days (see ASTM C157).

REINFORCEMENT STEEL

1. Reinforcement steel shall have a minimum yield strength of 60,000 PSI and conform with material specifications for reinforcing bars, ASTM A615 thru A617; see manual of standard practice, Concrete Reinforcing Steel Institute.

2. Welded wire fabric shall conform to ASTM A185.

3. All rebars shall be securely tied and held in place with a minimum concrete protection cover to all steel as follows:
   Walls, Columns, Beams, & Pilasters $1\frac{1}{2}$"
   Slabs $\frac{3}{4}$"
   Footings 3"

4. Reinforcing steel bends shall be made as per diagram, and/or in accordance with A.C.I. Code.

5. Lap all splices as specifically called for, but at least 38 bar diameters for bars less than or equal to #6, and 48 bar diameters, for bars greater than #6, (always 12" minimum) unless noted otherwise. Lap all splices in masonry reinforcement a minimum of 48 bar diameters.

6. Install corner bars at all footings and wall intersections to match horizontal reinforcing size and spacing. at intersections of continuous spread footings, extend all bars to far side of intersecting footing.

7. Install and secure reinforcement to prevent displacement during concrete placement. Provide the following concrete cover for reinforcing, unless specifically noted otherwise:
   a. Cast against earth: 3"
   b. Exposed to earth/weather: #6 thru #18: 2"
   c. Exposed to earth/weather: #5 & smaller: $1\frac{1}{2}$"

8. Install dowels to match reinforcement size and spacing indicated, unless noted otherwise.

9. Cast foundation walls, grade beams and footings in alternate panels not to exceed 60'-0" in length. Install shear keys at each construction joint and located at 1/3 points of spans.

10. Do not use horizontal construction joints in concrete pours unless shown on the drawings. The engineer must approve all deviations or additional joints in writing.

11. Cast slabs and beams/joists monolithically unless noted otherwise.

12. Reference architectural and mechanical drawings for locations of openings and sleeves in concrete walls and supported floors. Spread reinforcement at openings and sleeves unless otherwise indicated. Do not cut reinforcement.

13. Slope concrete slabs to floor drains shown on mechanical, plumbing, civil and architectural drawings.

14. Bond new concrete to hardened concrete with structural adhesive bonding agent per ASTM C1059. Install per manufacturer's instructions.

15. No holes or openings through foundation walls and/or footings without engineer's approval.

16. Do not embed aluminum in concrete.

CONCRETE MASONRY

1. CMU Minimum Compressive Strength, f'm = 1,500 psi.

2. Mortar: Walls below grade: Type M
   Bearing Walls: Type M or S

3. Coarse Grout: 3,000 psi. min. compressive strength conforming to ASTM C476.

   3.1 Grout solid bond beams, reinforced CMU cores, and CMU cores and wall cavities below grade.

   3.2 Masonry webs on each side of grouted cells shall be fully mortared.

4. Horizontal Joint Reinforcement: Two (2) No. 9 gage longitudinal wires at 16" vertically, U.N.O. Provide accessories for corners, intersections, etc.

5. Provide open bottom beam block units with 3" deep minimum web openings at horizontal reinforcement locations. A minimum clear space of one bar diameter shall be provided between the reinforcing bars and the face of masonry units.

6. CMU has been designed assuming "running bond" placement. Do no use "stack bond" unless approved by Structural Engineer.

7. Submit written construction procedures prior to the start of masonry construction.

8. No chases, risers, conduits, or toothing of masonry shall occur in masonry walls within 18 inches of beam bearing centerline.

9. Lap splices in reinforcing to be 48 bar diameters.

10. In addition to spacing indicated on plans, provide vertical bars at all corners, ends, jambs, intersections and both sides of control joints.

11. Extend all vertical reinforcement thru or into bond beams.

12. Provide dowels from supporting member (footing, beam, or slab) for all reinforced walls same size, location and spacing as wall reinforcing.

13. Vertical reinforcement shall be centered in cells of masonry unit, unless otherwise noted.

14. Bar positioners shall be used to hold vertical and bond beam reinforcement in proper alignment.

15. Vertical bars shall be held in position at top and bottom and at intervals not exceeding 200 bars diameters or 8 feet

16. Grouting of masonry lintels over openings shall be accomplished in one continuous operation.

17. Grouting shall be stopped $1\frac{1}{2}$" below the top of a course to form a key at the pour joint.

18. Grout all cells of concrete masonry units below grade or slab.

19. Provide clean out holes at least 3 inches in least dimension for grout pours over 5 feet in height.

   A. At structurally reinforced walls provide clean out holes at each structural vertical reinforcing bar.
   B. Clean out closures shall be braced to resist grout pressures

20. See architectural drawings for locations of vertical control joints.

21. At vertical control joints, bond beam reinforcement and joint reinforcement shall be discontinuous. Provide two $\frac{3}{4}$" diameter smooth dowels by 1'-4" across each control joint. Grease one end.

22. Special Inspections are required for the masonry construction on this project. The inspections include but are not limited to continuous inspections during the grouting process. Refer to Chapter 17 of the Kentucky Building Code, current edition, for specific requirements.

PRE-ENGINEERED STEEL METAL BUILDING:

The superstructure for this project shall be a Pre-Engineered steel Metal Building (PEMB) conforming to these general notes, and requirements of the Steel Metal Building's Manufacturer Association, the Kentucky Building Code, and additional requirements by the drawings and specifications for this project. Additionally, the pre-engineered steel metal building shall follow and conform to the following additional requirements.

A. Building's shop drawings shall be submitted with calculations sealed by a licensed professional structural engineer in the state of Kentucky. The shop drawings shall be complete showing details, sizes of members, including areas and section modulus and dimensions required to construct the building. All members used for the building shall show depths, widths, and thickness of the members rather than just shop markings. Erection drawings shall show location of members and connection details to be used.
B. Shop drawings along with complete calculations shall be sent to the general contractor for review and verifications of conditions and placement locations. The general contractor shall, after his review shall sign and date the drawings and calculations to the owner, and architect. Fabrication shall not begin until architect has reviewed, returned, and accepted the shop drawings submittal.
C. The design loads for this building shall comply with loading required by the Kentucky Building Code Chapter 16 and notes on these drawings.
D. Where purlins are fastened to rigid frames, blocking, clip connections shall be provided to prevent roll of the purlins. Purlins shall be lapped and bolted for continuity to prevent scissoring effect of the members over the girders.
E. There shall be lines of bridging on approximate 10'-0" on centers to hold purlins from buckling or twisting of the members.
F. Non-Shrink grout shall be used under column base plates to obtain required uniform bearing where required.
G. Structural loading shall be used to obtain final reactions, shears, moment, etc. for the steel frame. These values shall be listed and noted on the shop drawings for final adjustments of foundation sizes. Verifications of actual frame reactions, shears and directions of forces shall be listed prior to casting foundations for the structure and provided to the engineer.
H. Metal wall girts shall be sized to carry all load forces required for this building. Girts shall be sized to have a maximum vertical and/or horizontal deflection of span length divided by 360. Spacing and size of the girts shall be listed on building's shop drawings.
I. All pre-engineered framing members shall support additional forces due to mechanical equipment, or other attached miscellaneous loads. Temporary & permanent bracing and stability of the building's frame during erection is the responsibility of the contractor.

DISCLAIMER NOTE:

The pre-engineered steel metal building shall be supplied, fabricated, and erected by others. Poage Engineers and Associates Inc. has no responsibility for the pre-engineered metal building's design, fabrication or erection. The contractor shall provide shop drawings sealed by a registered structural engineer, who is registered in the state where the building is to be constructed. The sealed drawings shall be submitted to Poage Engineers and Associates Inc. of Lexington, Kentucky 40504, for review only. The contractor shall verify soil bearing pressure, and is to coordinate the structural, architectural drawings with the shop drawings by the manufacturer. The contractor shall coordinate concrete drawings with the electrical and mechanical drawings to make certain all pipe sleeves, ducts, inserts and holes are located and in place before each concrete pour.

LAYOUT NOTES:

The contractor shall survey and verify dimensions and elevations with the drawings prior to each concrete pour. Anchor bolts shall be sized by the metal building's manufacturer and shown on the shop drawing, matching the pre-engineered metal buildings requirements shown on the shop drawings. Foundations shall be poured by the concrete foundation contractor. This contractor shall provide and install anchor bolts by templates prior to pouring concrete and he shall make certain bolts are held in place with the correct alignment during the pouring of concrete. The contractor shall verify the location and proper placement of the anchor bolts to meet requirements of the building's manufacturer. Anchor bolts shall be cold bent and conform to ASTM A-307 requirements.

STRUCTURAL STEEL

1. Steel Shapes

   1.1 W-Shapes: ASTM A992 (Grade 50)
   1.2 Angles, Channels, Plates, UNO: ASTM A36
   1.3 Square/Rectangular/Round Hollow Structural Sections (HSS): ASTM A500, Grade B
   1.4 Structural steel exposed to weather shall be galvanized.

2. Anchor Rods, Bolts, and Studs

   2.1 Anchor Rods: ASTM F1554, Grade 36. Headed Rods or threaded rods with plate washer and heavy hex nut.

   2.2 All bolts for structural steel joint fasteners shall be 3/4"DIA. high strength structural bolts, ASTM A325, Torque Control (Tension Set), unless otherwise noted.

3. Post-Installed Anchors: The procedure listed below are the design basis for this project. Installation of expansion anchors shall be in accordance with the ICC ES report and manufacturer's instructions for the particular anchor.

   3.1 Expansion Anchors: Hilti Kwik Bolt TZ2 (ICC-ES ESR-4266), Simpson Strong-Tie Bolt 2 (ICC-ES ESR-3037), or Dewalt Power-Stud+ SD2 (ICC_ES ESR-2502). Minimum embedment = 6 times anchor diameter, UNO.

   3.2 Adhesive Anchors

      3.2.1 All-thread steel anchor conforming to ASTM A307 Grade A or ASTM A36 or ASTM F1554 Grade A36, zinc plated in accordance with ASTM B633.

      3.2.2 Adhesive conforming to Hilti HIT-RE-500 V3 (ICC-ES ESR-3814) or Hilti HIT-HY200 V3 (ICC-ES ESR-4868 (conc.) ESR-4878 (grouted cmu), Simpson SET-3G Epoxy (ICC-ES ESR-4057 (conc. & ice) ESR-4844 (grouted cmu), or Dewalt 110+ Epoxy Adhesive (ICC-ES ESR-3298), or Dewalt AC100+ Gold Adhesive (ICC-ES ESR-2582 (conc.). Minimum embedment = 6 times anchor diameter, UNO.

      3.2.3 For hollow concrete masonry, use screen tube approved by manufacturer and an adhesive conforming to Hilti HY-270 (ICC-ES ESR-4143) or Simpson Strong-Tie SET-3G (ICC-ES ESR-4844).

   3.3 Screw Anchors: Hilti KH-EZ (ICC-ES ESR-3027 (conc.) ESR-3056 (grouted cmu) or Simpson Titan-HD (ICC-ES ESR-2713 (conc.) ICC-ES ESR-1056 (grouted cmu) or Dewalt Screw-Bolt+ (ICC-ES ESR-3889 (conc.) ICC-ES ESR-4042 (grouted cmu). Minimum Embedment = 6 times anchor diameter, UNO.

   3.4 Substitutions will only be considered for products that have a code report recognizing the product for the appropriate application. The substitution request shall be accompanied by calculations that demonstrate the substituted product is capable of achieving the equivalent performance values of the design-basis product.

4. Structural steel shall be fabricated and erected according to the "Specification for Structural Steel Buildings" dated August 1, 2022 and the AISC "Code of Standard Practice for Steel Buildings and Bridges" dated May 9, 2022.

5. Connections shall be detailed based on the design information provided in the Structural Documents

   5.1 Standard Shear Connections: Details as bolted or welded double-angle, sible-plate, single-angle, or tee connections in accordance with the connection tables in the "Manual of Steel Construction", Thirteenth Edition.

      5.1.1 Shear connections not defined in the AISC Manual shall be designed by an Engineer licensed in the project state. This design service shall be included in the Contractor's scope of services. Shop drawings of such connections shall be sealed by the Engineer.

   5.2 Factored Design Forces/Reactions: As shown on the Structural Drawings or, if not shown, the factored design reaction shall be half of the "Maximum Total Uniform Load (LRFD)" tabulated in the "Manual of Steel Construction", Thirteenth Edition.

   5.3 Steel connections not specifically detailed in the Structural Drawings shall be designed by the Contractor. This design service shall be included in the Contractor's scope of services. Shop drawings of such connections shall be sealed by an Engineer licensed in the project state.

6. Shop Drawings: Submittal shall adequately depict all structural members and connections. Bolted connections shall connect a minimum of one-half (1/2) the depth of the member. Welded connections shall use continuous 1/4" fillet welds unless noted otherwise in contract documents. Show all field welds required on erection drawings.

7. All structural steel shall be fabricated and erected in accordance with the latest OSHA regulations regarding steel erection.

8. Hot rolled steel bars, plates, shapes and sheet piling must be new steel conforming to ASTM A6. Fabricate and install steel in accordance with AISC 303 "Code of Standard Practice for Steel Buildings and Bridges" and AISC 360 "Specification for Structural Steel Buildings".

9. Center columns and beams on grid lines unless noted otherwise in the contract documents.

10. Cuts indicated on the drawings, or as required for other trades, must be made in the shop and shown on the shop drawings. Field performed holes or cuts are not permitted without engineer approval.

11. Install non-metalltic shrinkage-resistant grout below base plates, in accordance with ASTM C1107 and a minimum strength of 6,000 PSI.

12. Fabricate structural steel with one coat of shop primer except the following members: galvanized surfaces, slip-critical surfaces, surfaces to be field welded, surfaces to receive fire proofing, or unless noted otherwise. Coordinate areas to be fireproofed with architectural drawings prior to fabrication.

13. Galvanized structural steel: ASTM A123 or ASTM A153. Galvanize after fabrication. Galvanize all exterior exposed steel, unless noted otherwise. Repair damaged galvanized coatings in accordance with ASTM A780.

14. Unless noted otherwise, the top of all steel columns are fabricated with a steel cap plate. Minimum cap plate dimensions match column width & depth, and minimum thickness of cap plate equals column web thickness (1/2" minimum).

15. Coordinate the exact location and size of all openings for mechanical equipment with the mechanical contractor prior to fabrication.

16. Reference the architectural, civil, mechanical, plumbing and electrical drawings for additional steel (if any) not indicated on the structural drawings.

CMW
The Shape of Ideas
Architecture
Civil Engineering
Landscape Architecture
a: 249 East Main Street
Suite 100
Lexington, Kentucky 40507
o: (859) 254-6623
w: http://www.cmwaec.com

POAGE ENGINEERS & ASSOCIATES
880 Sparta Court, Suite 200
Lexington, KY 40507
Phone: (859) 255-9034
Fax: (859) 252-3130

STATE OF KENTUCKY
BRIAN D. SCOTT
21768
LICENSED PROFESSIONAL ENGINEER
8/1/2025

STRUCTURAL NOTES
Distribution Center - Phase 1
NEWCOMB OIL CO. LLC
2590 US-150
BARDSTOWN, KY 40004

DOCUMENT PHASE

Issue Date:	August 1, 2025
Drawn By:	HMM
Checked By:	BDS
Revisions:	
Mark	Date

AHJ SEAL

Project Number
24030

S002

POAGE/24030/08.01.2025/HMM

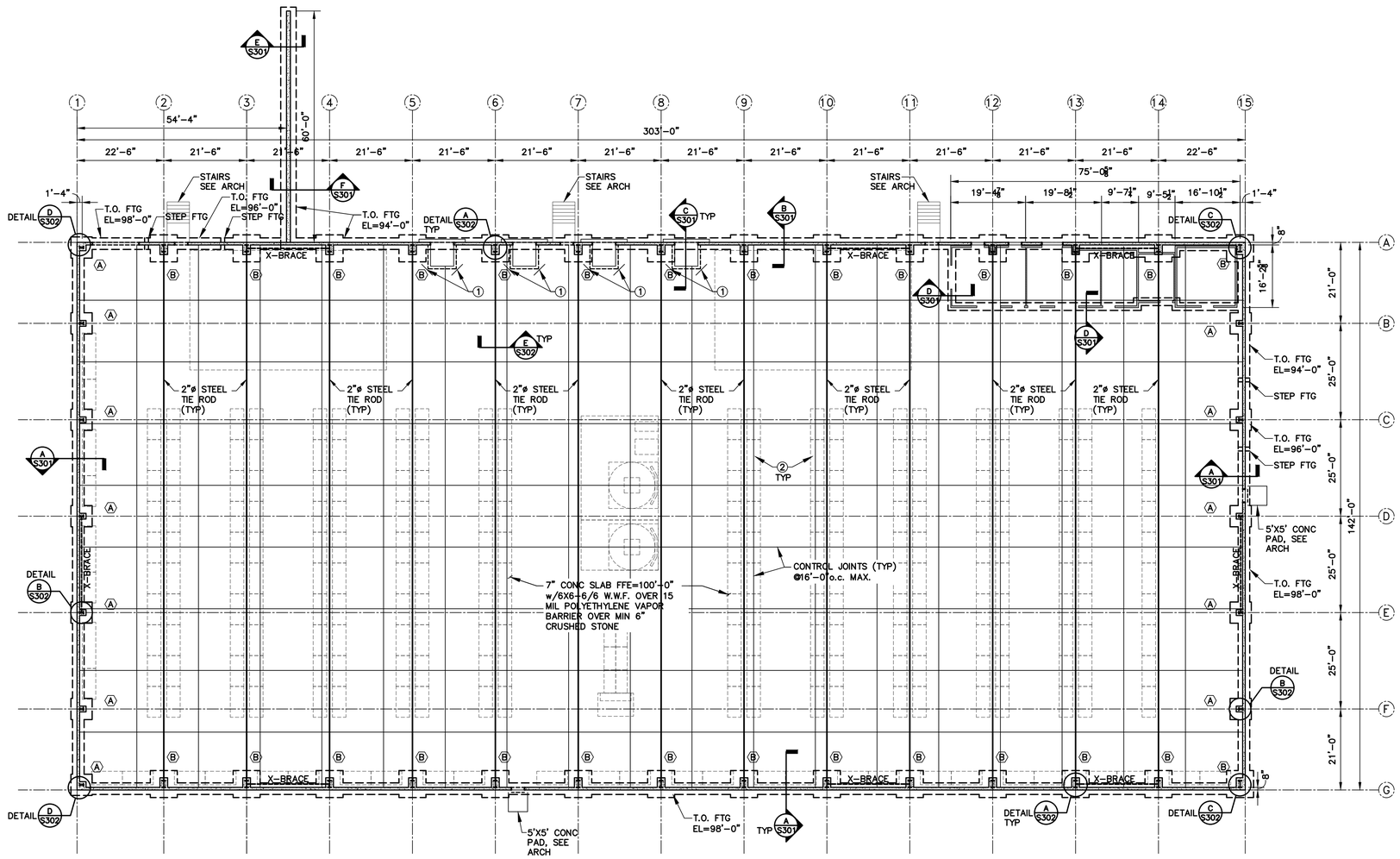

FOUNDATION PLAN

DATUM ELEVATION 695.15' = 100'-0" ASSUMED.

FOOTING SCHEDULE

MARK	FOOTING SIZE	REINFORCING STEEL
A	5'-6"x5'-6"x12"	(6) #5 BARS EACH WAY
B	7'-0"x7'-0"x18"	(8) #6 BARS EACH WAY TOP & BOTTOM

KEYED NOTES:

1. RE-ENTRANT CORNER BAR, SEE TYP DETAIL THIS SHEET
2. REFER TO ARCH FOR LAYOUT OF RACKING SYSTEM

NOTES:

1. DATUM ELEVATION TOP OF CONCRETE (T.O.C.) = 100'-0" ASSUMED.
2. CONTRACTOR SHALL COORDINATE FLOOR DRAINS & ELECTRICAL CONDUITS WITH MECHANICAL, ELECTRICAL & PLUMBING DWGS NOT SHOWN ON THE STRUCTURAL DWGS.
3. ALL DIMENSIONS SHOWN ARE TO FACE OF CONCRETE FOUNDATION WALL UNLESS NOTED OTHERWISE (U.N.O.)
4. REFER TO ARCHITECTURAL DWGS FOR LOCATIONS OF ALL INTERIOR NONLOAD-BEARING WALLS NOT LOCATED ON STRUCTURAL DWGS.
5. REFER TO GEOTECH REPORT FOR ADDITIONAL RECOMMENDATIONS.
6. SAW CONTROL JOINTS IN THE CONCRETE SLAB IMMEDIATELY AFTER SET UP. REFER TO DWGS, BUT MAXIMUM SPACING SHALL BE 16'-0" IN EITHER DIRECTION (TYPICAL U.N.O.)
7. COORDINATE INSTALLATION OF DOCK LEVELER EQUIPMENT w/MANUFACTURER INSTRUCTIONS.
8. COORDINATE INSTALLATION OF ANCHOR BOLTS w/THE PEMB MANUFACTURER/SUPPLIER.

CMW The Shape of Ideas

Architecture
Civil Engineering
Landscape Architecture
a: 249 East Main Street
Suite 100
Lexington, Kentucky 40507
o: (859) 254-6623
w: http://www.cmwaec.com

POAGE ENGINEERS & ASSOCIATES
880 Sparta Court, Suite 200
Lexington, KY 40507
Phone: (859) 255-9034
Fax: (859) 252-3130

STATE OF KENTUCKY BRIAN D SODE 21768 LICENSED PROFESSIONAL ENGINEER
8/1/2025

FOUNDATION PLAN

Distribution Center - Phase 1
NEWCOMB OIL CO. LLC
2590 US-150
BARDSTOWN, KY 40004

DOCUMENT PHASE

Issue Date:	August 1, 2025
Drawn By:	HMM
Checked By:	BDS
Revisions:	

Mark	Date

AHJ SEAL

Project Number
24030

S101

POAGE/24030/08.01.2025/HMM

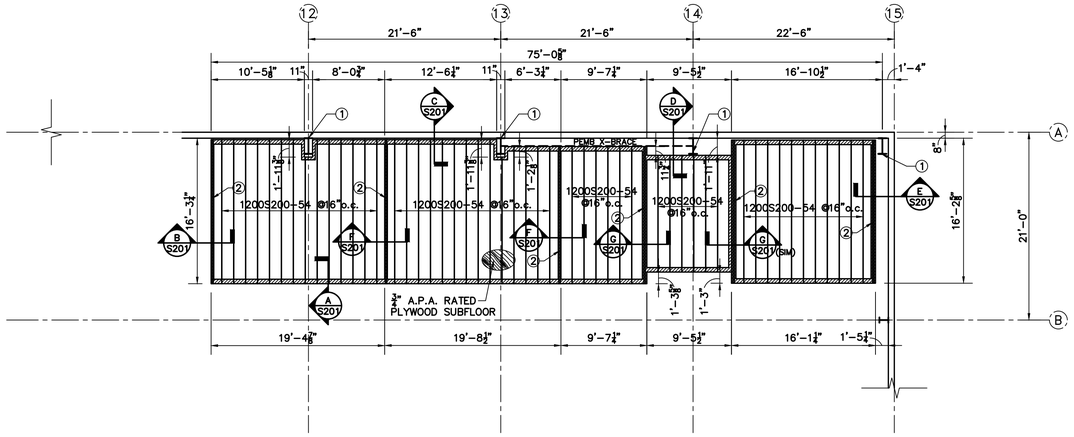

MEZZANINE FRAMING PLAN

FLOOR LOADING: 100 PSF LL
15 PSF DL

KEYED NOTES:

1. NOTCH STUDWALL & MEZZANINE FLOOR AROUND PEMB RIGID FRAME AS REQUIRED
2. DOUBLE JOISTS BACK-TO-BACK CENTERED ON STUD WALL BELOW

NOTE: THE MEZZANINE PLATFORM FRAMING IS NOT DESIGNED TO HAVE ANY OPENINGS CUT THROUGH. IF THE OWNER ELECTS TO CHANGE THE DESIGN INTENT BASED ON MEP DESIGN BY OTHERS THEN THE STRUCTURAL ENGINEER OF RECORD WILL NEED TO BE CONSULTED FOR POSSIBLE FRAMING MODIFICATIONS AS MAY BE REQUIRED AS RESULTING FROM THE MEP DESIGN BY OTHERS.

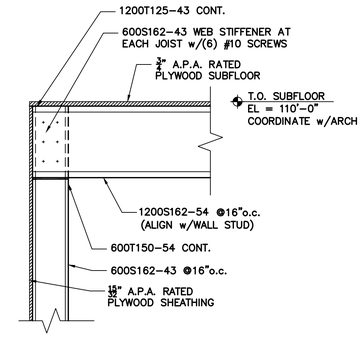

SECTION A S201

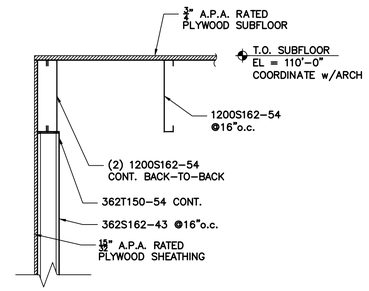

SECTION B S201

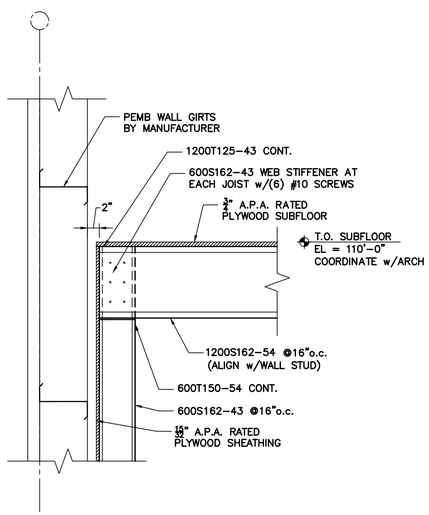

SECTION C S201

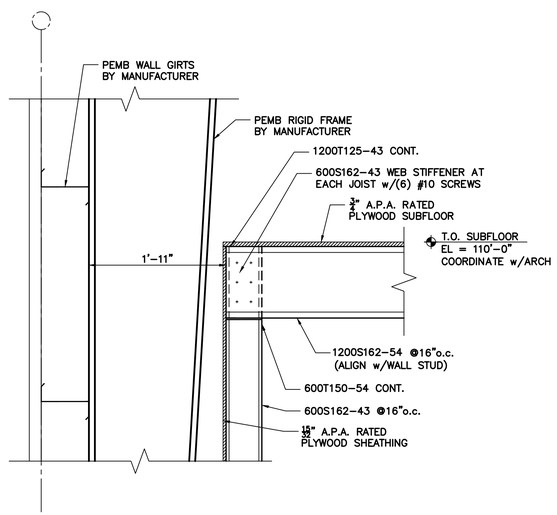

SECTION D S201

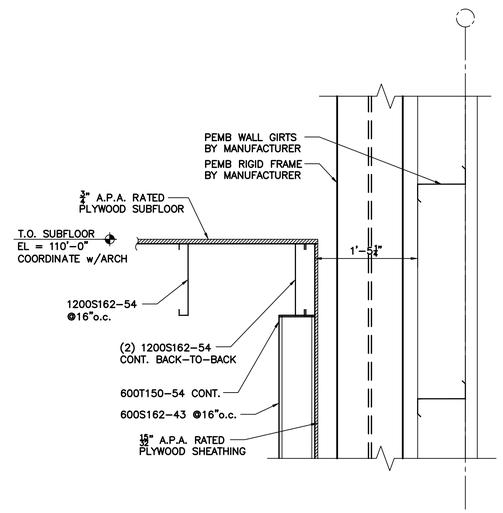

SECTION E S201

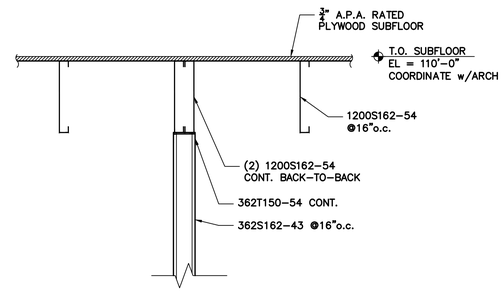

SECTION F S201

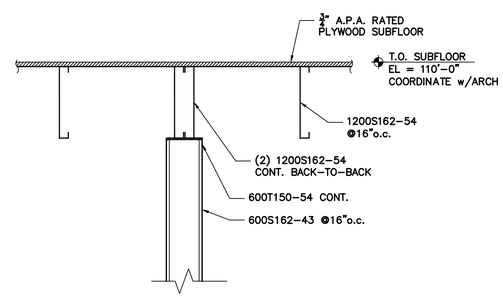

SECTION G S201

CMW The Shape of Ideas

Architecture
Civil Engineering
Landscape Architecture
a: 249 East Main Street
Suite 100
Lexington, Kentucky 40507
o: (859) 254-6623
w: http://www.cmwaec.com

POAGE ENGINEERS & ASSOCIATES
880 Sparta Court, Suite 200
Lexington, KY 40507
Phone: (859) 255-9034
Fax: (859) 252-3130

STATE OF KENTUCKY BRIAN D. SCOTT 21768 LICENSED PROFESSIONAL ENGINEER
8/1/2025

MEZZANINE FRAMING PLAN

Distribution Center - Phase 1
NEWCOMB OIL CO. LLC
2590 US-150
BARDSTOWN, KY 40004

DOCUMENT PHASE

Issue Date:	August 1, 2025
Drawn By:	HMM
Checked By:	BDS
Revisions:	

Mark	Date

AHJ SEAL

Project Number
24030

S201

P:\24030/108.01.2025/hMM

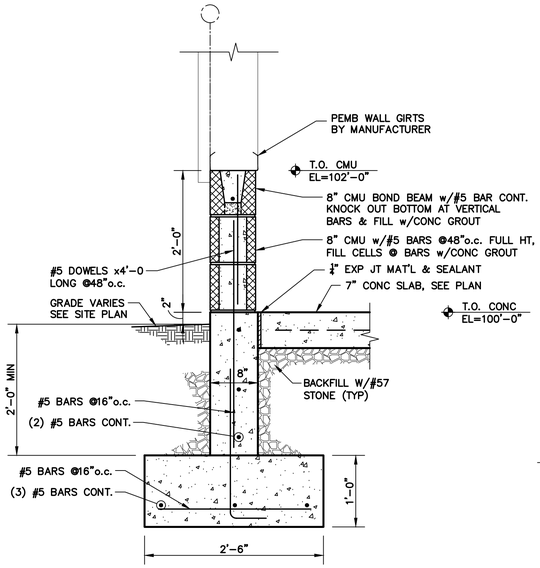

SECTION A / S301

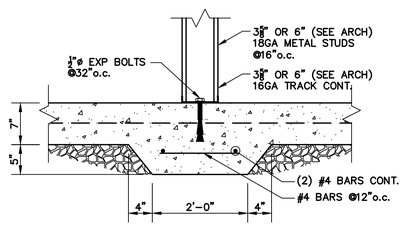

SECTION D / S301

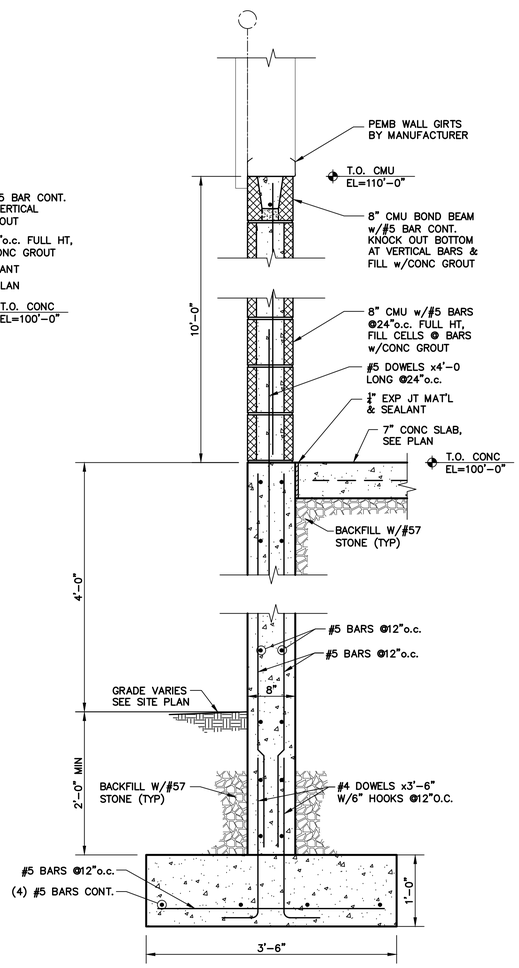

SECTION B / S301

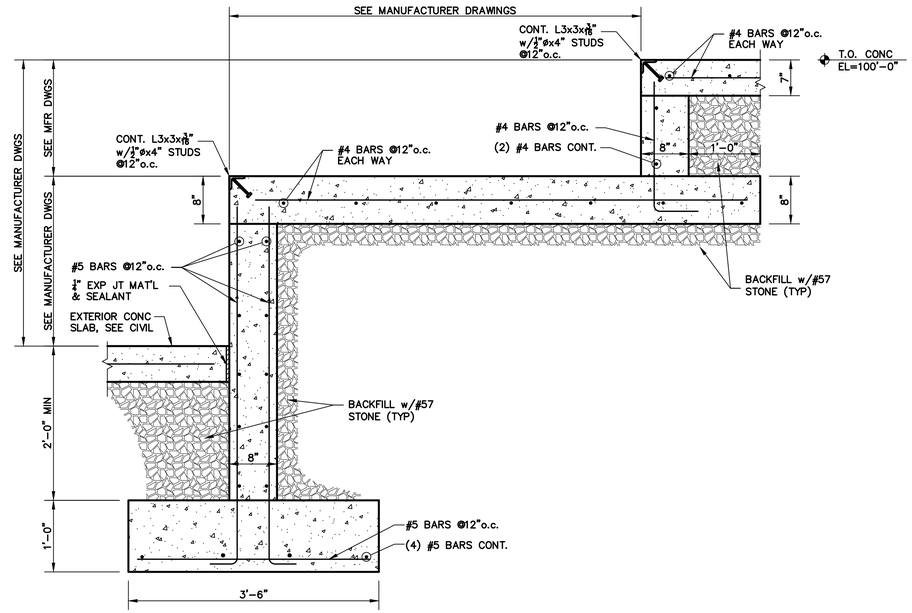

TYPICAL DOCK LEVELER SECTION C / S301

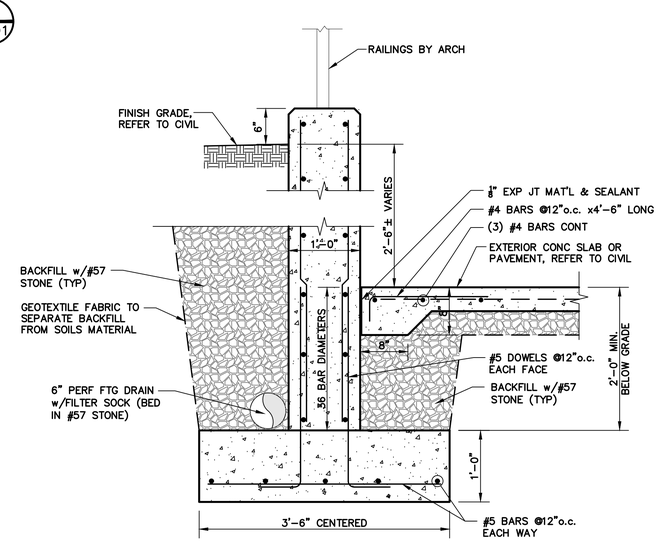

SECTION E / S301

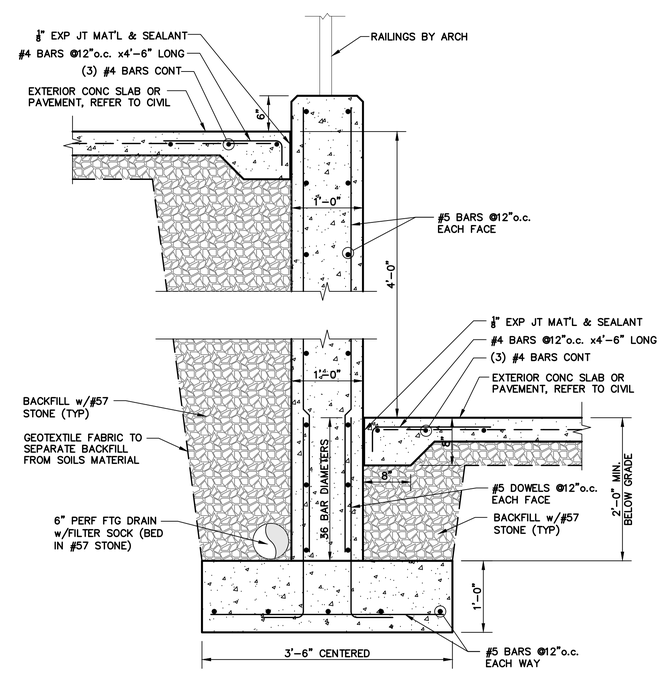

SECTION F / S301

CMW The Shape of Ideas

Architecture
Civil Engineering
Landscape Architecture
a: 249 East Main Street
Suite 100
Lexington, Kentucky 40507
o: (859) 254-6623
w: http://www.cmwaec.com

POAGE ENGINEERS & ASSOCIATES
880 Sparta Court, Suite 200
Lexington, KY 40507
Phone: (859) 255-9034
Fax: (859) 252-3130

STATE OF KENTUCKY BRIAN D. SCOTT 21768 LICENSED PROFESSIONAL ENGINEER
8/1/2025

SECTIONS & DETAILS

Distribution Center - Phase 1
NEWCOMB OIL CO. LLC
2590 US-150
BARDSTOWN, KY 40004

DOCUMENT PHASE

Issue Date:	August 1, 2025
Drawn By:	HMM
Checked By:	BDS
Revisions:	

Mark	Date

AHJ SEAL

Project Number
24030

S301

POAGE/24030/08.01.2025/hMM

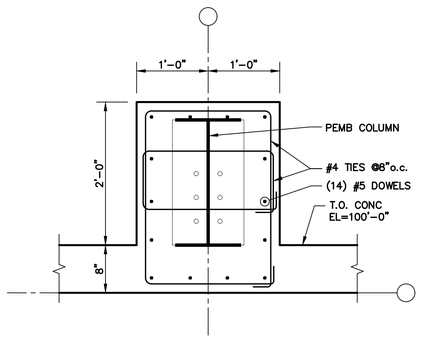

DETAIL A S302

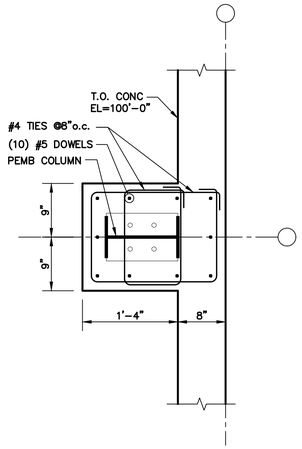

DETAIL B S302

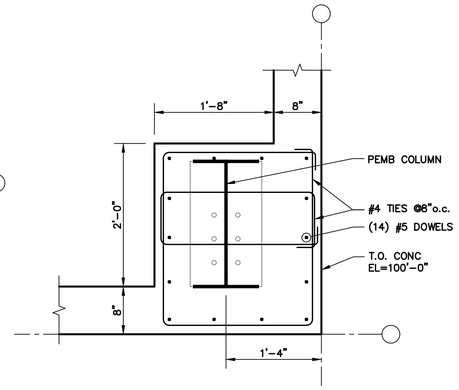

DETAIL C S302

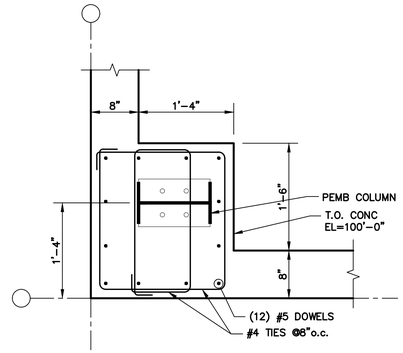

DETAIL D S302

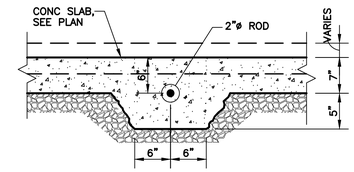

SECTION A-A

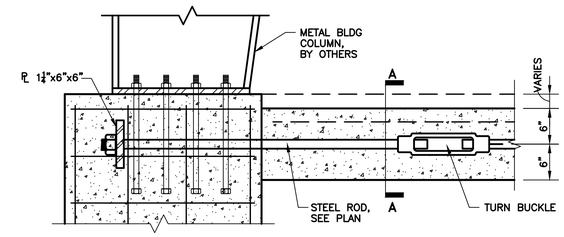

TYPICAL TIE-ROD CONNECTION E S302

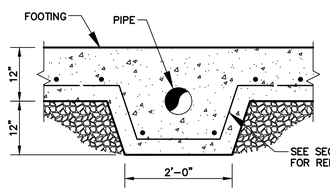

TYPICAL PIPE PERFORATION AT FOOTINGS

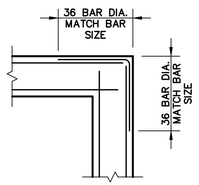

TYPICAL CORNER REINFORCING DETAIL

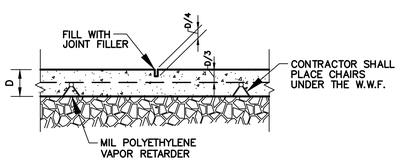

TYPICAL CONTROL JOINT DETAIL

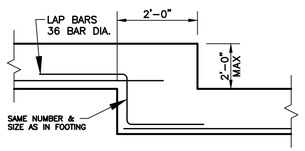

TYPICAL STEP FOOTING

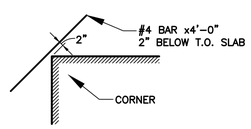

RE-ENTRANT CORNER REINFORCEMENT IN SLAB

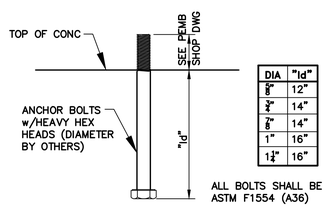

DIA	"ld"
⅝"	12"
¾"	14"
⅞"	14"
1"	16"
1¼"	16"

TYPICAL ANCHOR BOLT EMBEDMENT DETAIL

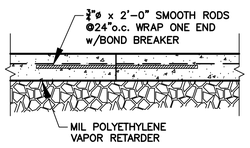

TYPICAL CONSTRUCTION JOINT DETAIL

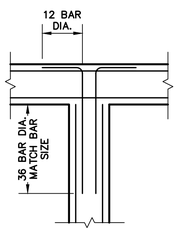

TYPICAL WALL INTERSECTION REINFORCING DETAIL

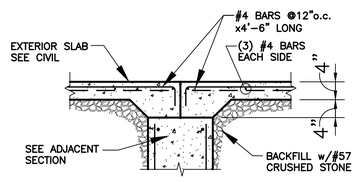

TYPICAL DOOR OPENING

CMW The Shape of Ideas

Architecture
Civil Engineering
Landscape Architecture
a: 249 East Main Street
Suite 100
Lexington, Kentucky 40507
o: (859) 254-6623
w: http://www.cmwaec.com

POAGE ENGINEERS & ASSOCIATES
880 Sparta Court, Suite 200
Lexington, KY 40507
Phone: (859) 255-9034
Fax: (859) 252-3130

STATE OF KENTUCKY
BRIAN D. SCOTT
41768
LICENSED PROFESSIONAL ENGINEER
8/1/2025

SECTIONS & DETAILS

Distribution Center - Phase 1
NEWCOMB OIL CO. LLC
2590 US-150
BARDSTOWN, KY 40004

DOCUMENT PHASE

Issue Date:	August 1, 2025
Drawn By:	HMM
Checked By:	BDS
Revisions:	

Mark	Date

AHJ SEAL

Project Number
24030

S302

POAGE/24030/08.01.2025/HMM

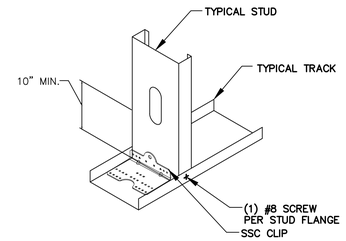

DETAIL AT HOLES IN STUDS

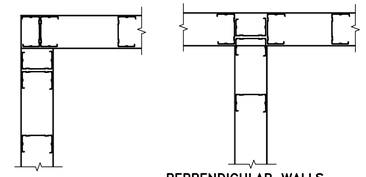

TYPICAL WALL INTERSECTION PLAN DETAILS

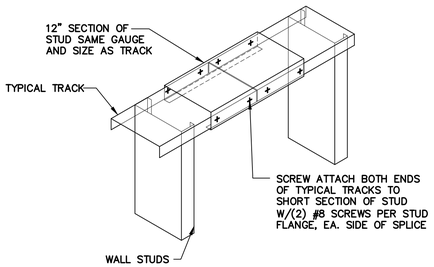

TYPICAL STUD WALL TOP PLATE SPLICE DETAIL

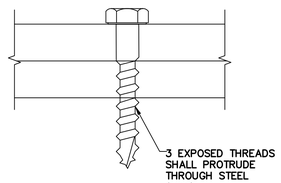

SCREW CONNECTION REQUIREMENTS

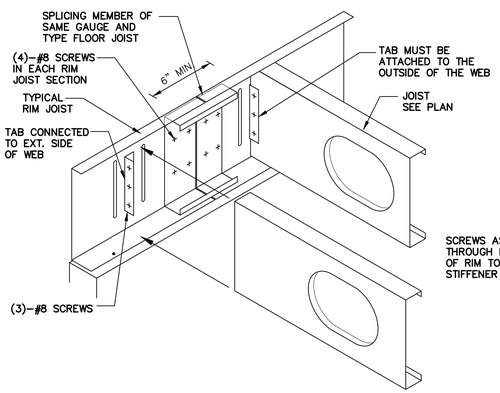

TYPICAL RIM JOIST TOP PLATE SPLICE DETAIL

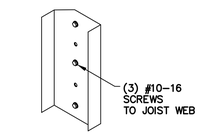

CLARK DIETRICH'S EASYCLIP QUICK SWIST WEB STIFF.

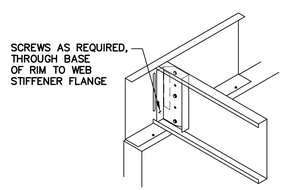

STIFFENED WEB JOISTS

TYPICAL FRAMING DETAILS

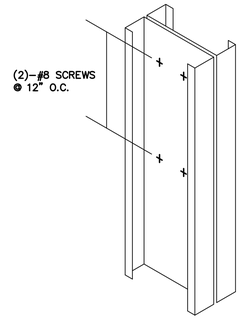

BACK TO BACK STUD CONNECTION

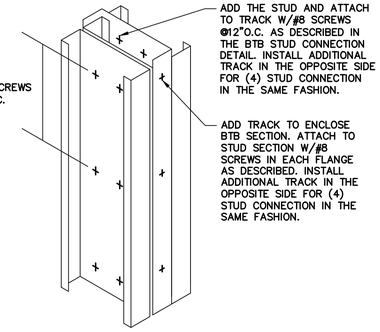

DOUBLE BACK TO BACK STUD CONNECTION

TYPICAL FASTENING PATTERN FOR MULTIPLE STUDS

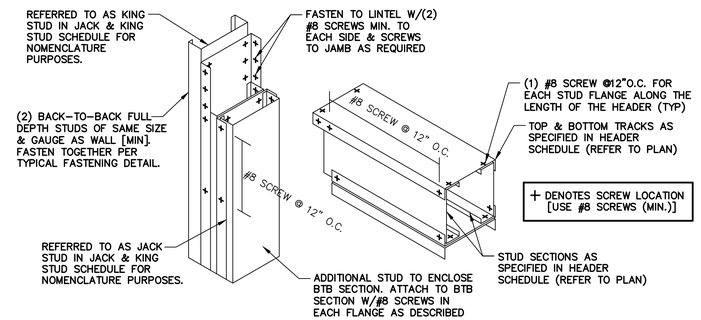

TYP. HEADER-JAMB CONNECTION

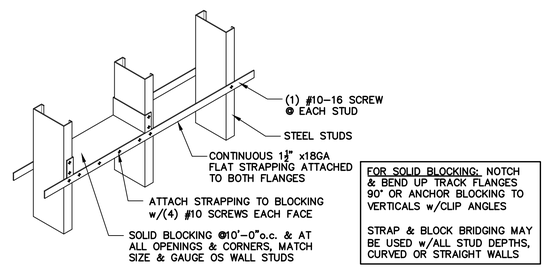

FOR SOLID BLOCKING: NOTCH & BEND UP TRACK FLANGES 90° OR ANCHOR BLOCKING TO VERTICALS w/CLIP ANGLES

STRAP & BLOCK BRIDGING MAY BE USED w/ALL STUD DEPTHS, CURVED OR STRAIGHT WALLS

LOAD BEARING WALL BRIDGING

(FOR WALLS WITH SHEATHING PLACED PERPENDICULAR TO FRAMING)

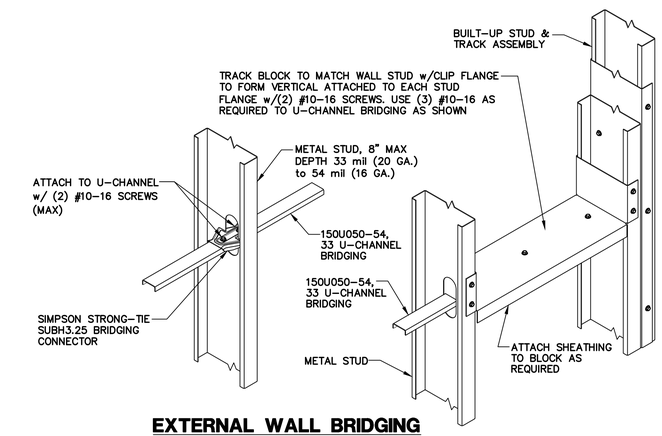

EXTERNAL WALL BRIDGING

(BRIDGE EXTERIOR WALL AT MID-HEIGHT)

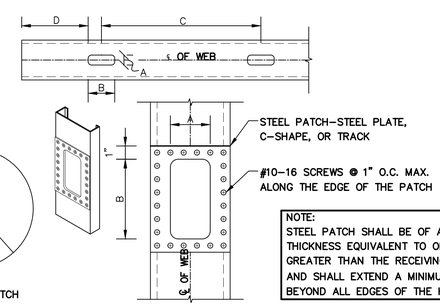

NOTE:
STEEL PATCH SHALL BE OF A THICKNESS EQUIVALENT TO OR GREATER THAN THE RECEIVING MEMBER AND SHALL EXTEND A MINIMUM OF 1" BEYOND ALL EDGES OF THE HOLE.

STUD HOLE PENETRATION

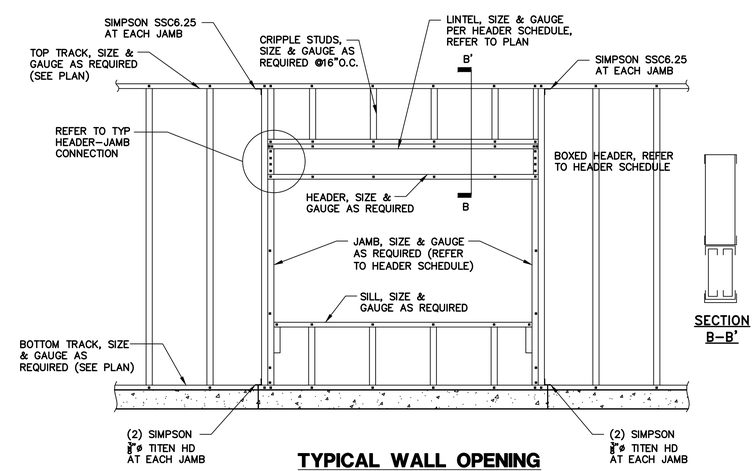

TYPICAL WALL OPENING

SECTION B-B'

MAXIMUM HOLE SIZE W/ REINFORCING

STUD SIZE	MAX HOLE DEPTH (A)	MAX HOLE LENGTH (B)	MIN HOLE SPACING (C)	MIN HOLE EDGE DIST. (D)
3 5/8" STUD	1 3/4"	6"	16"	10"
6" STUD	3"	6"	16"	10"
8" STUD	4"	8"	24"	10"
10" STUD	5"	10"	24"	10"
12" STUD	6"	12"	24"	10"

MAX. HOLE SIZE W/O REINFORCING WALL FRAMING

STUD SIZE	MAX HOLE DEPTH (A)	MAX HOLE LENGTH (B)	MIN HOLE SPACING (C)	MIN HOLE EDGE DIST. (D)
3 5/8" STUD	1 1/2"	4"	7"	10"
6" STUD	1 1/2"	4"	11"	10"
8" STUD	1 1/2"	4"	16"	10"
10" STUD	1 1/2"	4"	20"	10"
12" STUD	1 1/2"	4"	24"	10"

MAXIMUM HOLE SIZE W/O REINFORCING JOIST FRAMING

STUD SIZE	MAX HOLE DEPTH (A)	MAX HOLE LENGTH (B)	MIN HOLE SPACING (C)	MIN HOLE EDGE DIST. (D)
6" STUD (20, 18, 16, 14, 12 GA.)	1 1/2"	4"	7"	10"
8" STUD (18, 16, 14, 12 GA.)	1 1/2"	4"	11"	10"
10" STUD (16, 14, 12 GA.)	1 1/2"	4"	16"	10"
12" STUD (16 GA.)	1 1/2"	4"	20"	10"
12" STUD (14 & 12 GA.)	1 1/2"	4"	24"	10"

TYPICAL WALL FASTENING SCHEDULE (U.N.O.)

CONNECTION	NAILING
WALL BOTTOM TRACK TO FLOOR	#8 SCREWS @12"o.c.
WALL BOTTOM TRACK TO FOUNDATION	1/2"ø ANCHOR BOLTS @24"o.c.
WALL BOTTOM TRACK TO WOOD SILL PLATE	STEEL ∡ SPACED @4'-0"o.c. w/(4) #8 SCREWS & (4) 10d NAILS OR (6) 8d COMMON NAILS
WALL STUD TO TOP OR BOTTOM TRACK	(2) #8 SCREWS AT EACH END PER FLANGE
STRUCTURAL PANELS, SUBFLOOR & ROOF (NAIL & GLUE SUBFLOOR)	#10 SCREWS @6"o.c. ALONG ALL EDGES & @12"o.c. ALONG INTERMEDIATE MEMBERS
* SHEARWALLS	N/A
*NON-STRUCTURAL WALLS 5/8" OR 1/2" GYPSUM BOARD TO FRAMING	#6 SCREWS @12"o.c.

NOTE: ALL WOOD STRUCTURAL PANELS SHALL BE ATTACHED TO STEEL FRAMING w/FLAT-HEAD SELF-DRILLING TAPPING SCREWS WITH A MINIMUM HEAD DIAMETER OF 0.292 IN (8 MM)

COLD FORMED STEEL HEADERS

OPENING SIZE	WALL TYPE	WEB MEMBERS	TRACKS	JACK STUDS[2]	KING STUDS[2]
0'-8" to 4'-0"	3 5/8" CFS WALL	(2)800S162-18GA	(2)362T200-18GA	(2)362S162-18GA(BTB)	(2)362S162-18GA(BTB)
4'-0" to 8'-0"	3 5/8" CFS WALL	(2)800S162-16GA	(2)362T300-16GA	(2)362S162-16GA(BTB)	(2)362S162-16GA(BTB)
0'-8" to 4'-0"	6" CFS WALL	(2)800S162-18GA	(2)600T200-18GA	(2)600S162-18GA(BTB)	(2)600S162-18GA(BTB)
4'-0" to 8'-0"	6" CFS WALL	(2)1000S162-16GA	(2)600T300-16GA	(2)600S162-16GA(BTB)	(2)600S162-16GA(BTB)

NOTES: (BTB) = BACK-TO-BACK
1. FOR CONNECTION INFORMATION REFER TO CFS DETAILS ON FOLLOWING 'SECTIONS & DETAILS' SHEETS.
2. JACK & KING STUDS SHALL MATCH THE GAUGE & TYPE OF STUD WALL WHERE THE OPENINGS ARE LOCATED.

CMW The Shape of Ideas
Architecture
Civil Engineering
Landscape Architecture
a: 249 East Main Street
Suite 100
Lexington, Kentucky 40507
o: (859) 254-6623
w: http://www.cmwaec.com

POAGE ENGINEERS & ASSOCIATES
880 Sparta Court, Suite 200
Lexington, KY 40507
Phone: (859) 255-9034
Fax: (859) 252-3130

STATE OF KENTUCKY BRIAN D. SCOTT 31768 LICENSED PROFESSIONAL ENGINEER
8/1/2025

SECTIONS & DETAILS
Distribution Center - Phase 1
NEWCOMB OIL CO. LLC
2590 US-150
BARDSTOWN, KY 40004

DOCUMENT PHASE

Issue Date:	August 1, 2025
Drawn By:	HMM
Checked By:	BDS
Revisions:	

Mark	Date

AHJ SEAL

Project Number
24030

S401

POAGE/24030/08.01.2025/HMM

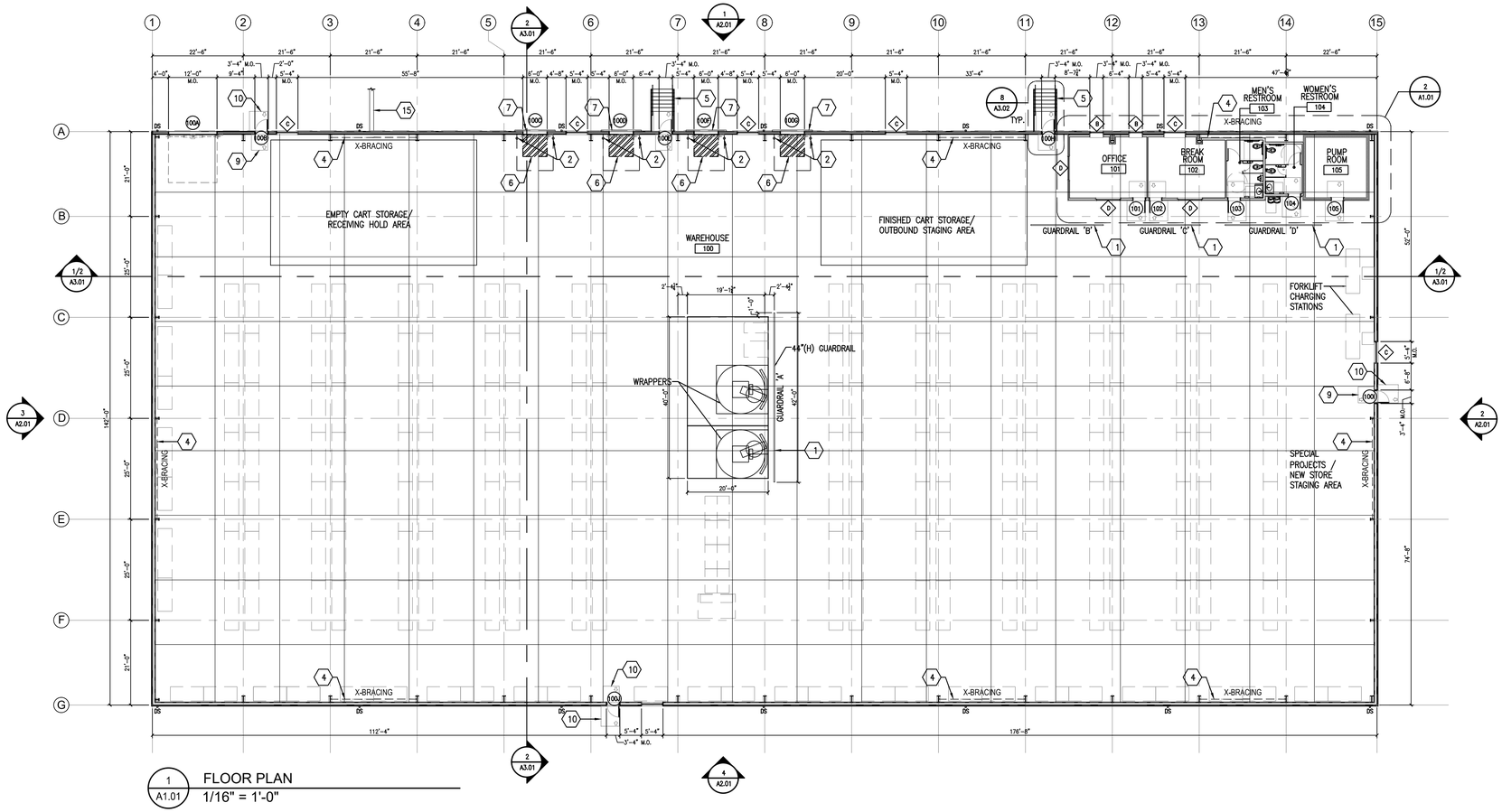

1 A1.01 FLOOR PLAN
1/16" = 1'-0"

GENERAL NOTES

A. THESE DRAWINGS ARE DIAGRAMMATIC IN NATURE, FIELD VERIFY ALL CONDITIONS, QUANTITIES AND MATERIALS. REPORT DISCREPANCIES TO ARCHITECT FOR CLARIFICATION. DO NOT SCALE DRAWINGS.

B. CONTRACTOR IS RESPONSIBLE FOR COORDINATION OF ALL CONSTRUCTION. ALL CONTRACTORS OF ALL DISCIPLINES TO COORDINATE CONSTRUCTION PRIOR TO INSTALLATION.

C. DIMENSIONS ARE TO THE CENTERLINE OF STRUCTURAL FRAME, FACE OF GYP WALL OR UNLESS NOTED OTHERWISE.

D. INTERIOR WALLS SHALL BE 3 5/8" METAL STUDS 16" O.C. WITH 5/8" GYP BD. EACH SIDE UNLESS NOTED OTHERWISE. PROVIDE BLOCKING IN WALLS FOR DOOR WALL STOPS.

E. ALL DRYWALL CEILINGS SHALL BE GLUED AND SCREWED.

F. OWNER SHALL VERIFY THAT GEOTECHNICAL CONDITIONS AND SOIL BEARING CAPACITY MEET THE REQUIREMENTS OF THE "FOUNDATION DESIGN" NOTED IN THE STRUCTURAL DRAWINGS.

G. FILL ALL TRENCHES UNDER PAVEMENT WITH STONE

H. ALL PROPERTY CORNER PINS SHALL BE ENCASED IN CONCRETE 12" DEEP, 8" DIAMETER AND SHALL BE FLUSH WITH THE GROUND.

I. CONTROL JOINTS IN EXTERIOR BUILDING CONCRETE SIDEWALKS SHALL BE TOOLED AND SAW CUT. REFER TO STRUCTURAL DRAWINGS FOR MORE INFORMATION.

J. NEWCOMB OIL SHALL CHECK WALLS FOR ALIGNMENT, LOCATION OF ELECTRICAL AND PLUMBING AND STRING LINE THE WALLS PRIOR TO DRYWALL BEING INSTALLED.

K. THE BUILDING ELECTRICAL CONTRACTOR SHALL INSTALL THE BUILDING SIGNS.

L. SEE CIVIL DRAWINGS FOR BOLLARD LOCATION.

M. GENERAL CONTRACTOR IS RESPONSIBLE FOR COORDINATION OF ALL SUB TRADES AND REQUIREMENTS BY OWNER.

N. ELECTRICAL, HVAC, AND PLUMBING TO BE LOCATED PER FEDERAL, STATE, AND LOCAL CODES. GENERAL CONTRACTOR TO COORDINATE.

O. REFER TO SHT. A2.01 FOR DOWNSPOUT SPACING DIMENSIONS.

SHEET KEYNOTES ⬡

1. 1 1/2" DIA. 44"(H) DOUBLE-RAIL GUARDRAIL
2. 6" DIA. x 4'-0"(H) STEEL BOLLARD – PROVIDE (2) PER O.H. DOOR – PAINT
3. 6"(W) x 9"(H) ADA COMPLIANT ROOM SIGNAGE
4. P.E.M.B. X-BRACING – SEE P.E.M.B. 'ENGINEER OF RECORD' STAMPED / SIGNED DDWG'S FOR ADDITIONAL INFORMATION
5. REFER TO 8/A3.02 FOR ENLARGED STAIR PLAN, SECTION, AND DETAILS
6. AIR POWERED DOCK LEVELER – COORDINATE LOCATION OF WALL MOUNTED CONTROLS W/ OWNER
7. LAMINATED DOCK BUMPER – 4 1/2"(D) x 7"(H) x 10'-0"(L)
8. HI-LOW DRINKING FOUNTAIN – SEE INTERIOR ELEVATION 000000
9. 48"(D) ACCESSIBLE DOOR CLEARANCE WITH 12" CLEARANCE AT LATCH JAMB
10. 60"(D) ACCESSIBLE DOOR CLEARANCE WITH 18" CLEARANCE AT LATCH JAMB
11. 60" DIAMETER ACCESSIBLE FLOOR CLEARANCE TURNING AREA
12. 56"(W) X 60"(D) ACCESSIBLE WATER CLOSET FIXTURE FLOOR CLEARANCE
13. 30"(W) X 48"(D) ACCESSIBLE LAVATORY FIXTURE FLOOR CLEARANCE CENTERED ON LAVATORY
14. 30"(W) X 48"(D) ACCESSIBLE URINAL FIXTURE FLOOR CLEARANCE CENTERED ON URINAL
15. CONCRETE RETAINING WALL – SEE CIVIL AND STRUCTURAL DRAWINGS

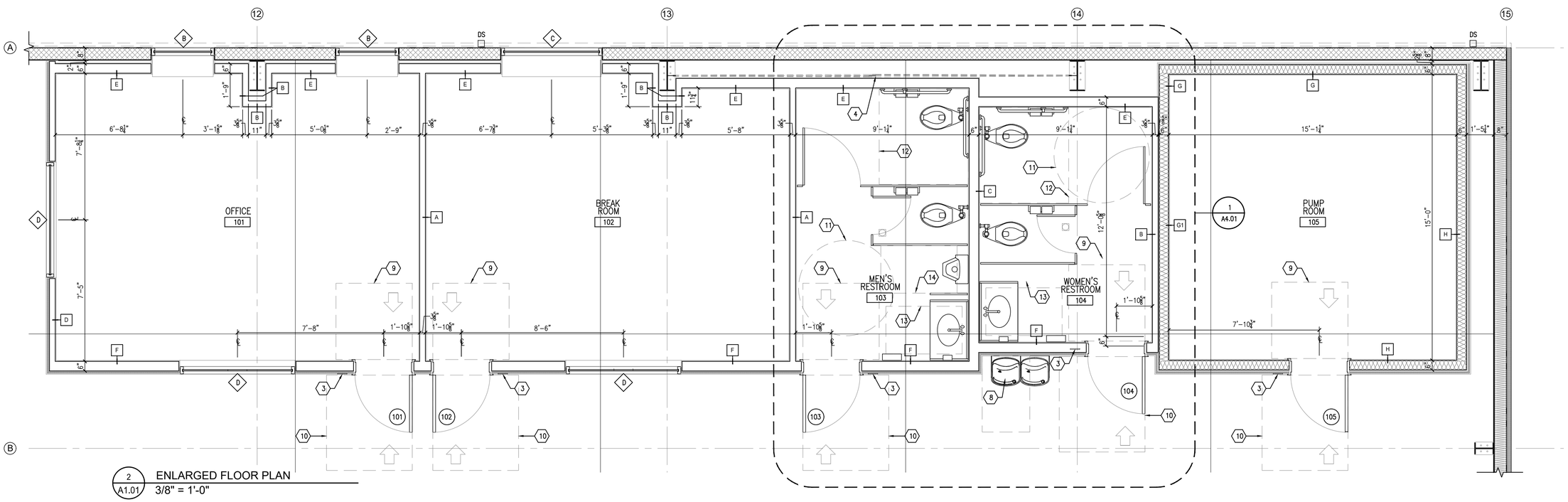

2 A1.01 ENLARGED FLOOR PLAN
3/8" = 1'-0"

CMW The Shape of Ideas
Architecture
Civil Engineering
Landscape Architecture
a: 249 East Main Street
Suite 100
Lexington, Kentucky 40507
o: (859) 254-6623
w: www.cmwaec.com

BILL PICKERING REGISTERED No. 4915 COMMONWEALTH OF KENTUCKY ARCHITECT
01 AUGUST 2025

FLOOR PLAN
DISTRIBUTION CENTER II - PHASE I
NEWCOMB OIL CO., LLC
951 WITHROW CT.
BARDSTOWN, KY 40004

PERMIT DOCUMENTS

Issue Date:	AUGUST 1, 2025
Drawn By:	JTH/JMT
Checked By:	BP
Revisions:	
	-
	-
	-
	-
	-
Mark	Date

AHJ SEAL

Project Number
25011.01

A1.01

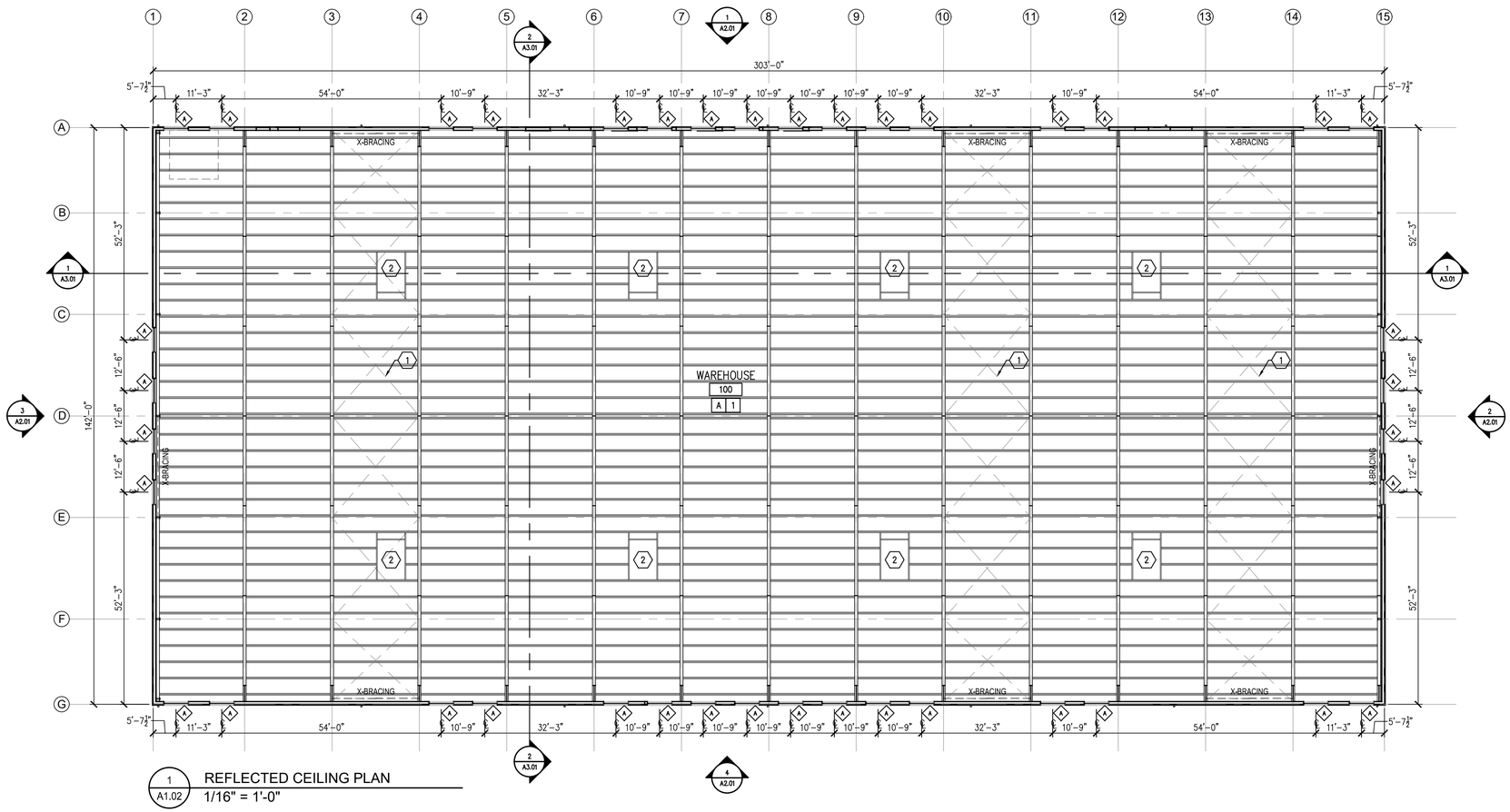

1 A1.02 REFLECTED CEILING PLAN
1/16" = 1'-0"

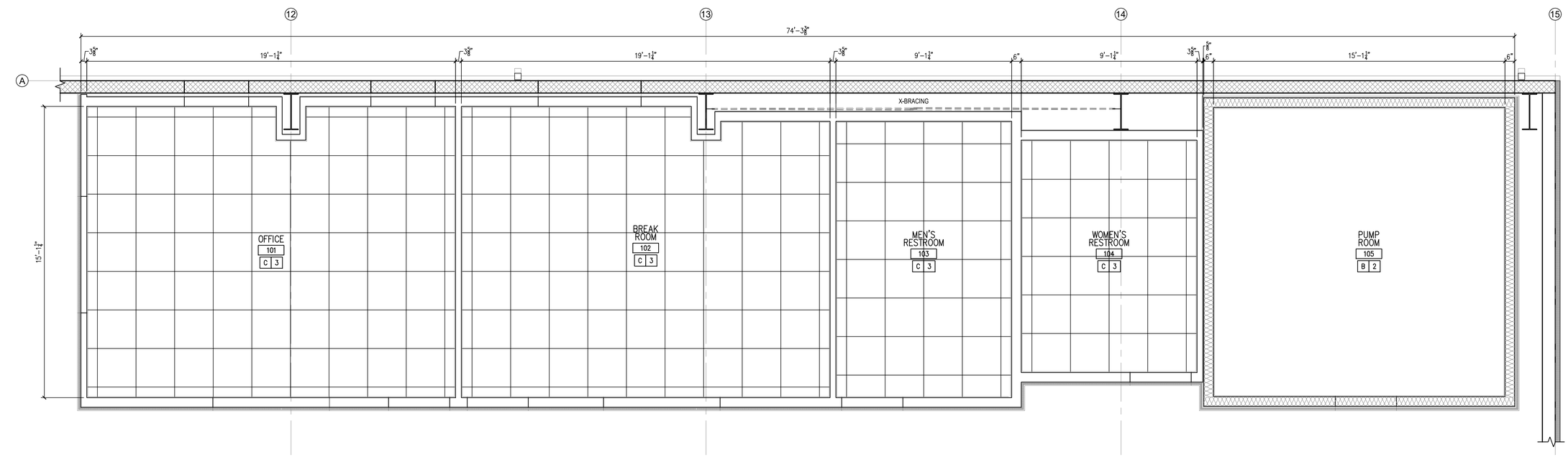

2 A1.02 ENLARGED REFLECTED CEILING PLAN
3/8" = 1'-0"

GENERAL NOTES

A. REFER TO SHT. A1.01 'GENERAL NOTES'

SHEET KEYNOTES

1. P.E.M.B. X–BRACING – SEE P.E.M.B. 'ENGINEER OF RECORD' STAMPED / SIGNED DDWG'S FOR ADDITIONAL INFORMATION
2. FRAMED OPENING FOR ROOFTOP MECHANICAL EQUIPMENT – REFER TO SHT. A1.03 FOR DIMENSIONS / LOCATIONS – TYP

CEILING SYMBOLS LEGEND

- SUSPENDED 2'–0" x 2'–0" GRID ACOUSTICAL PANEL CEILING W/ PANEL TYPE AS SCHEDULED AT HEIGHT A.F.F. AS SCHEDULED.
- SUSPENDED 1'–4"x4'–0" LINEAR HIGHBAY LIGHT FIXTURE
- SURFACE / CHAIN MOUNT 6"x4'–0" LED ENCLOSED LIGHT FIXTURE (MEZZANINE LEVEL)
- LED SURFACE MOUNTED 7"x2'–0" LIGHT FIXTURE (RESTROOMS)
- LED RECESSED VOLUMETRIC 2'–0"x2'–0" LIGHT FIXTURE
- STRUT MOUNTED 6"x4'–0" LED ENCLOSED LIGHT FIXTURE
- SURFACE / CHAIN MOUNT 2'–0"x4'–0" LED STRIP LIGHT FIXTURE (UTILITY ROOM)
- 6" DIAMETER RECESSED LED DOWNLIGHT FIXTURE
- EXIT SIGN
- LED WALL MOUNTED EXTERIOR LIGHT FIXTURE
- EXHAUST FAN
- MECHANICAL DIFFUSERS AND REGISTERS
- FIRE PROTECTION SPRINKLER HEAD

CEILING TYPE / FINISH KEY

	MATERIAL
A	P.E.M.B EXPOSED PURLINS W/ R38 INSULATION, THERMAL BLOCKS, AND VINYL LINER
B	⅝" GYP BD OVER 12" MTL FRAMING (SEE WALL SECTIONS)
C	2'X2' ACOUST CEILING PANEL SYSTEM W/ 15/16" PREFINISHED MTL GRID

	HEIGHT
1	SLOPED 1:12 (SEE BLDG SECTIONS)
2	8'–11 3/8"
3	8'–0"

CMW The Shape of Ideas
Architecture
Civil Engineering
Landscape Architecture
a: 249 East Main Street
Suite 100
Lexington, Kentucky 40507
o: (859) 254-6623
w: www.cmwaec.com

BILL PICKERING REGISTERED No. 4915 COMMONWEALTH OF KENTUCKY ARCHITECT
01 AUGUST 2025

REFLECTED CEILING PLAN
DISTRIBUTION CENTER II - PHASE I
NEWCOMB OIL CO., LLC
951 WITHROW CT.
BARDSTOWN, KY 40004

PERMIT DOCUMENTS

Issue Date:	AUGUST 1, 2025
Drawn By:	JTH/JMT
Checked By:	BP
Revisions:	
	-
	-
	-
	-
	-
Mark	Date

AHJ SEAL

Project Number
25011.01

A1.02

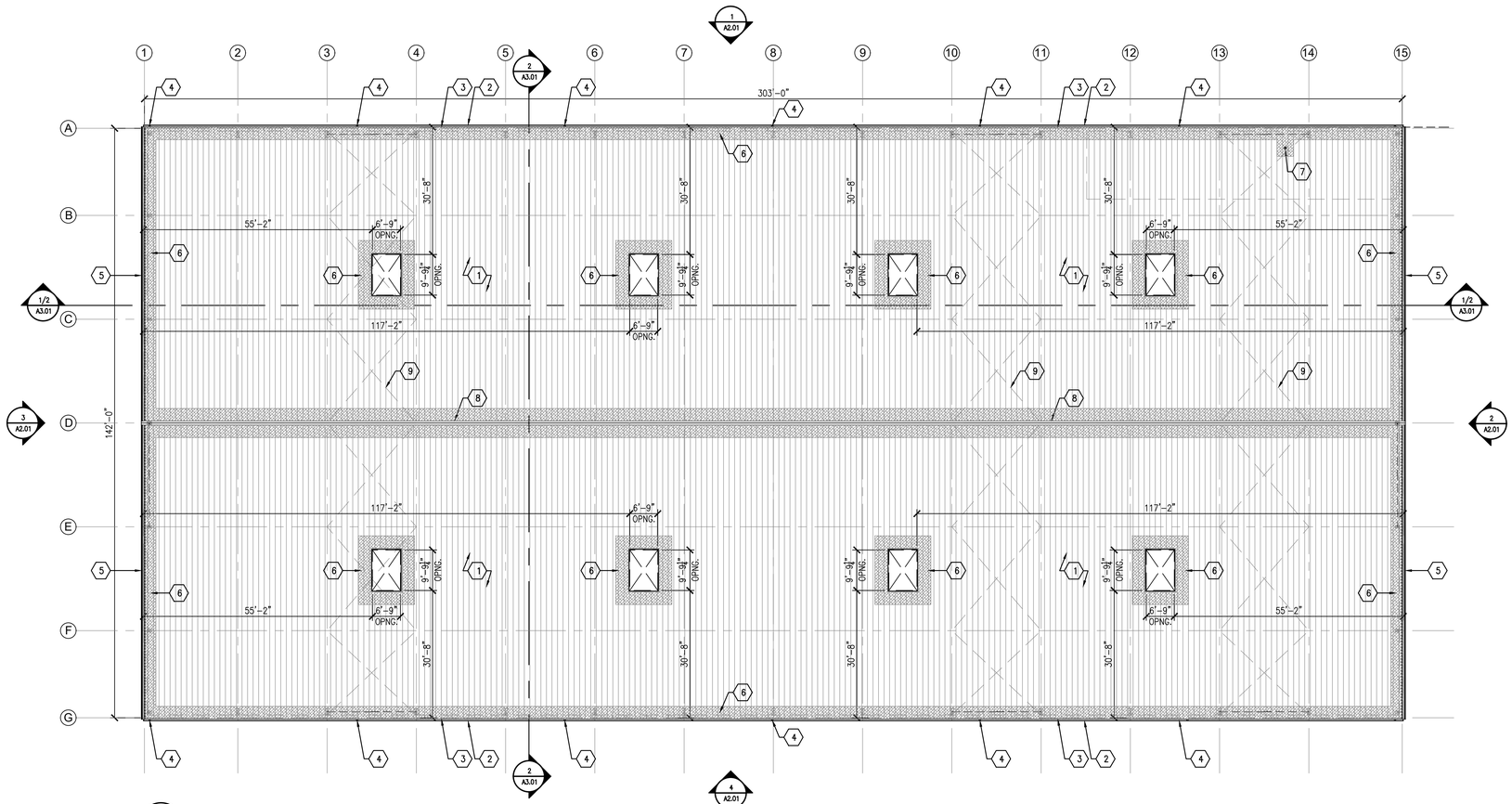

1 A1.03 ROOF PLAN
1/16" = 1'-0"

GENERAL NOTES

A. REFER TO SHT. A1.01 'GENERAL NOTES'

SHEET KEYNOTES ⬡

1. PREFINISHED METAL ROOF PANEL SYSTEM WITH INTEGRAL INTERLOCKING SEAMS. PROVIDE COMPONENTS REQUIRED FOR A COMPLETE WEATHERTIGHT PANEL SYSTEM
2. 6"(W) PEMB PREFINISHED METAL GUTTER SYSTEM – SPACE SUPPORT BRACKETS @ 32" OC MIN.
3. CONT PREFINISHED METAL FLASHING W/ CONCEALED FASTENERS
4. 4"(SQ) PREFINISHED METAL DOWNSPOUT W/ COLOR MATCHED ANCHOR STRAPS SPACED PER MANF RECOMMENDATIONS. CONNECT DOWNSPOUT TO SUBSURFACE DRAINAGE PIPING – REFER TO CIVIL DWG'S AND SPEC'S
5. CONT PREFINISHED METAL RAKE EDGE W/ CONCEALED FASTENERS
6. 30 MIL SELF–ADHERING CONT ICE AND WATER SHEET UNDERLAYMENT
7. PROVIDE FLEXIBLE PLUMBING VENT BOOT @ EACH PIPE PENETRATION – FASTEN BOOT TO ROOF PANELS AS RECOMMENDED BY MANUFACTURER.
8. CONT PREFINISHED METAL RIDGE CAP W/ CONCEALED FASTENERS
9. P.E.M.B. X–BRACING – SEE P.E.M.B. 'ENGINEER OF RECORD' STAMPED / SIGNED DDWG'S FOR ADDITIONAL INFORMATION

CMW
The Shape of Ideas
Architecture
Civil Engineering
Landscape Architecture
a: 249 East Main Street
Suite 100
Lexington, Kentucky 40507
o: (859) 254-6623
w: www.cmwaec.com

BILL PICKERING
REGISTERED
No. 4915
COMMONWEALTH OF KENTUCKY
ARCHITECT
01 AUGUST 2025

ROOF PLAN

DISTRIBUTION CENTER II - PHASE I
NEWCOMB OIL CO., LLC
951 WITHROW CT.
BARDSTOWN, KY 40004

PERMIT DOCUMENTS

Issue Date:	AUGUST 1, 2025
Drawn By:	JTH/JMT
Checked By:	BP
Revisions:	
	-
	-
	-
	-
	-
Mark	Date

AHJ SEAL

Project Number
25011.01

A1.03

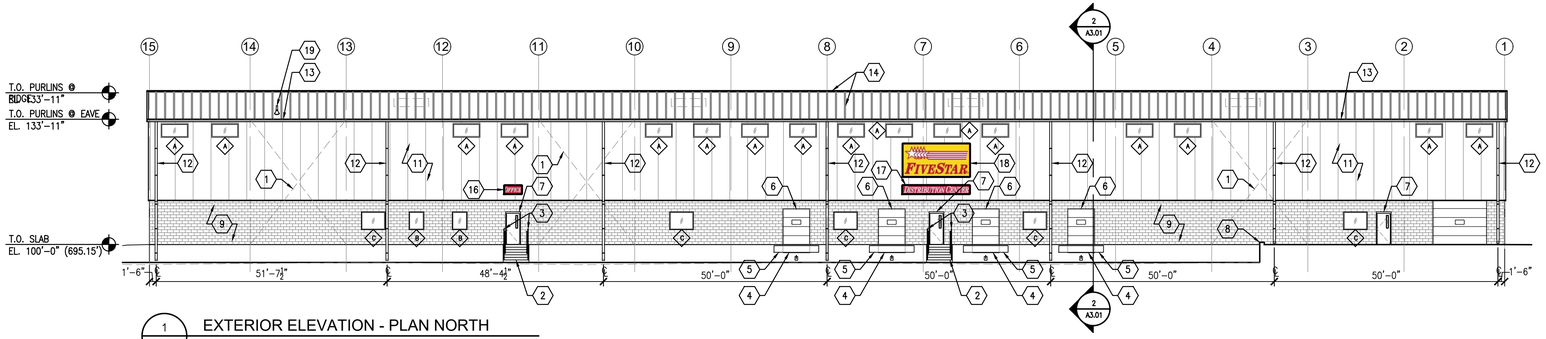

1 A2.01 EXTERIOR ELEVATION - PLAN NORTH
1/16" = 1'-0"

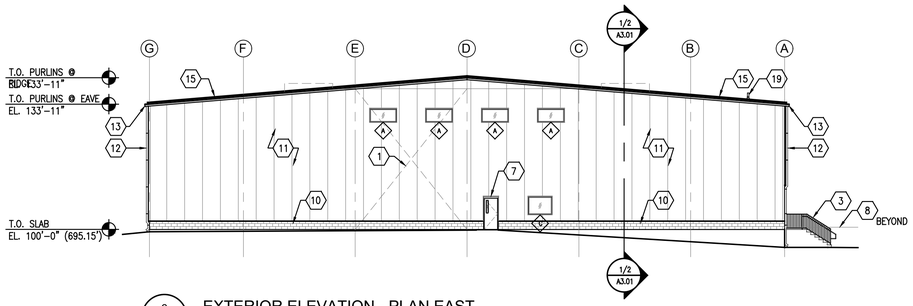

2 A2.01 EXTERIOR ELEVATION - PLAN EAST
1/16" = 1'-0"

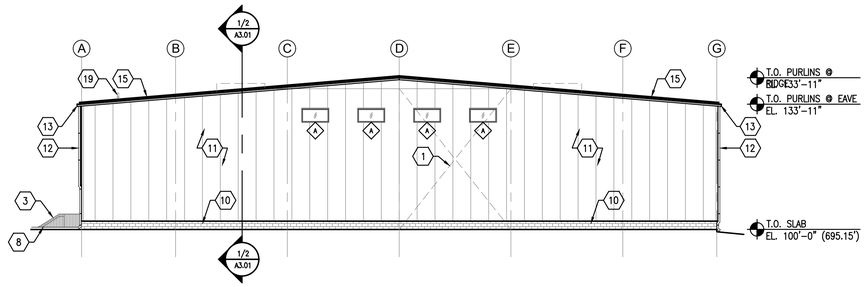

3 A2.01 EXTERIOR ELEVATION - PLAN EAST
1/16" = 1'-0"

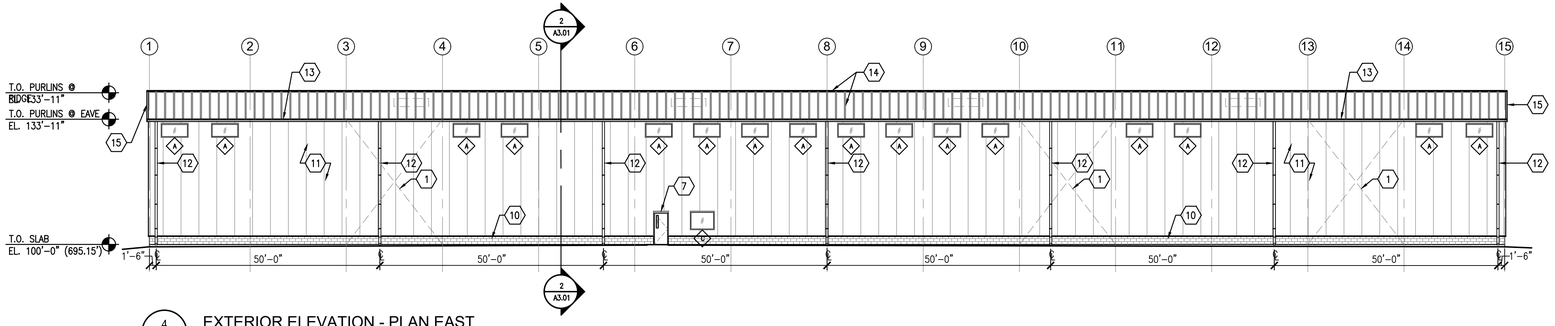

4 A2.01 EXTERIOR ELEVATION - PLAN EAST
1/16" = 1'-0"

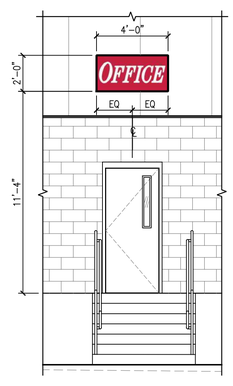

5 A2.01 SIGN ELEVATION
1/4" = 1'-0"

6 A2.01 SIGN ELEVATION
1/4" = 1'-0"

GENERAL NOTES

A. REFER TO SHT. A1.01 'GENERAL NOTES'

B. REFER TO SHT. A6.01 FOR PREFINISHED ALUM WINDOW –ELEVATIONS AND DETAILS

SHEET KEYNOTES ⬡

1. P.E.M.B. X–BRACING – SEE P.E.M.B. 'ENGINEER OF RECORD' STAMPED / SIGNED DDWG'S FOR ADDITIONAL INFORMATION
2. REFER TO A3.02 FOR ENLARGED STAIR PLAN, SECTION, AND DETAILS
3. 1½" DIA. 44"(H) GUARDRAIL W/ ½" DIA. VERTICAL PICKETS SPACED @ 3¾" OC – SEE ENLARGED DETAIL 10/A3.02
4. AIR POWERED DOCK LEVELER – COORDINATE LOCATION OF WALL MOUNTED CONTROLS W/ OWNERINSTALL PER MANF'S INSTRUCTIONS
5. LAMINATED DOCK BUMPER – 4½"(D) x 7"(H) x 10'–0"(L) – INSTALL PER MANF'S INSTRUCTIONS
6. PREFINISHED INSULATED SECTIONAL O.H. DOOR – SEE DOOR SCHEDULE
7. INSULATED GALV. H.M. DOOR AND FRAME – SEE DOOR SCHEDULE
8. CONCRETE RETAINING WALL – SEE CIVIL AND STRUCTURAL DRAWINGS
9. 8" CMU x 10'–0"(H) (15–COURSES) – SEE SHT. A3.01 FOR BUILDING AND WALL SECTIONS
10. 8" CMU WALL x 2'–0"(H) (3–COURSES) – SEE SHT. A3.01 FOR BUILDING AND WALL SECTIONS
11. 3"(T) INSULATED METAL WALL PANEL – PROVIDE MODEL 'SANTA FE' AS MANF'D BY NUCOR BUILDINGS GROUP
12. 4"X4"SQ. GALV. PREFINISHED METAL DOWNSPOUT W/ COLOR MATCHED ANCHOR STRAPS SPACED 6'–0" OC
13. P.E.M.B. MANUFACTURER'S CONT GALV. PREFINISHED METAL GUTTER
14. PREFINISHED STANDING SEAM METAL ROOF PANEL SYSTEM – PROVIDE MODEL 'SS360' AS MANF'D BY NUCOR BUILDINGS GROUP
15. P.E.M.B. MANUFACTURER'S CONT GALV. PREFINISHED METAL RAKE EDGE
16. 2'–0"x4'–0" 'OFFICE' SIGNAGE – SEE ENLARGED ELEVATION 5/A2.01
17. 2'–0"x15'–0" 'DISTRIBUTION CENTER' SIGNAGE – SEE ENLARGED ELEVATION 6/A2.01
18. 7'–6"x15'–0" 'FIVE STAR' SIGNAGE – SEE ENLARGED ELEVATION 6/A2.01
19. PROVIDE FLEXIBLE PLUMBING VENT BOOT @ EACH PIPE PENETRATION – FASTEN BOOT TO ROOF PANELS AS RECOMMENDED BY MANUFACTURER.

CMW The Shape of Ideas
Architecture
Civil Engineering
Landscape Architecture
a: 249 East Main Street
Suite 100
Lexington, Kentucky 40507
o: (859) 254-6623
w: www.cmwaec.com

BILL PICKERING REGISTERED No. 4915 COMMONWEALTH OF KENTUCKY ARCHITECT
01 AUGUST 2025

EXTERIOR ELEVATIONS

DISTRIBUTION CENTER II - PHASE I
NEWCOMB OIL CO., LLC
951 WITHROW CT.
BARDSTOWN, KY 40004

PERMIT DOCUMENTS

Issue Date:	AUGUST 1, 2025
Drawn By:	JTH/JMT
Checked By:	BP
Revisions:	
	-
	-
	-
	-
	-
Mark	Date

AHJ SEAL

Project Number
25011.01

A2.01

Xrefs: 3M2X4SHT_Newcomb A-ELEV

File Name: Q:\Newcomb Oil\25011.01 Distribution Center II\02 DWG\03 ARCH\04 CD PHASE1\SHEET\A2.01.dwg

PLOT DATE: Friday, August 1, 2025 1:43:53 PM

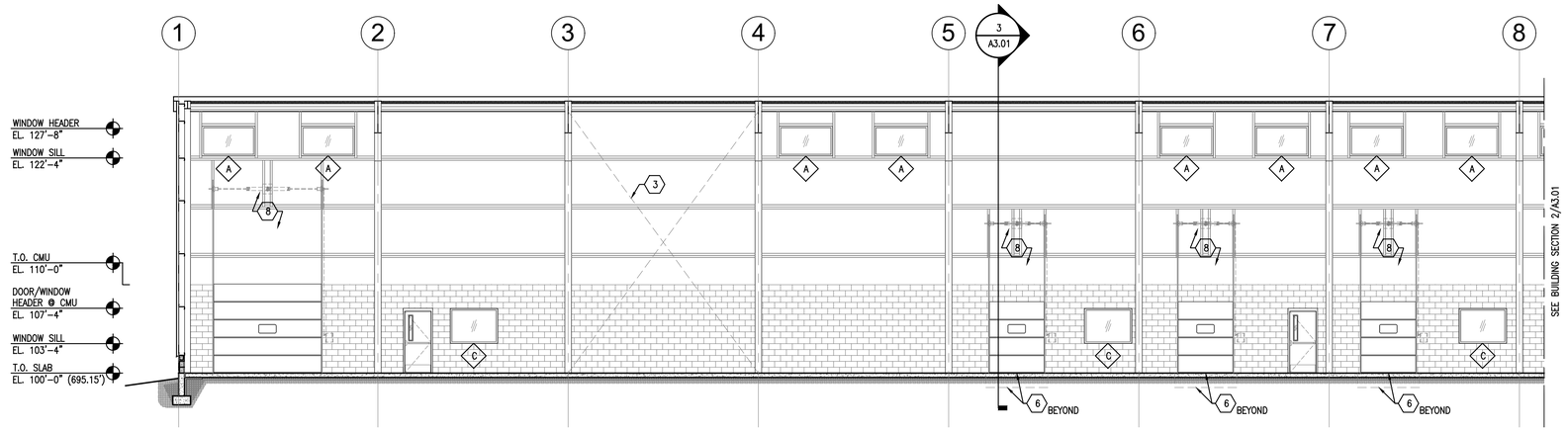

1 A3.01 BUILDING SECTION
1/8" = 1'-0"

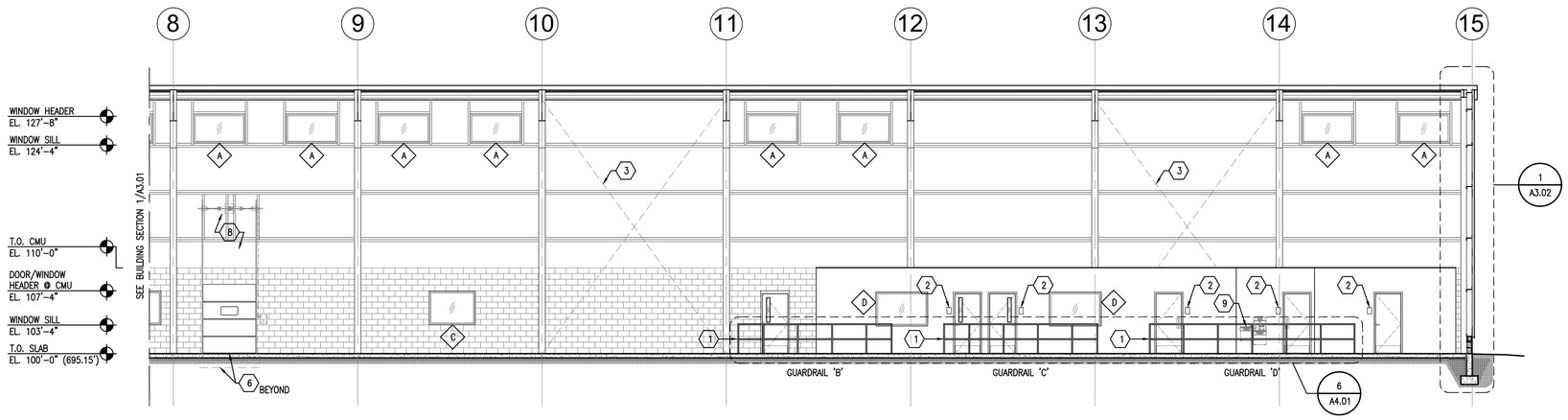

2 A3.01 BUILDING SECTION
1/8" = 1'-0"

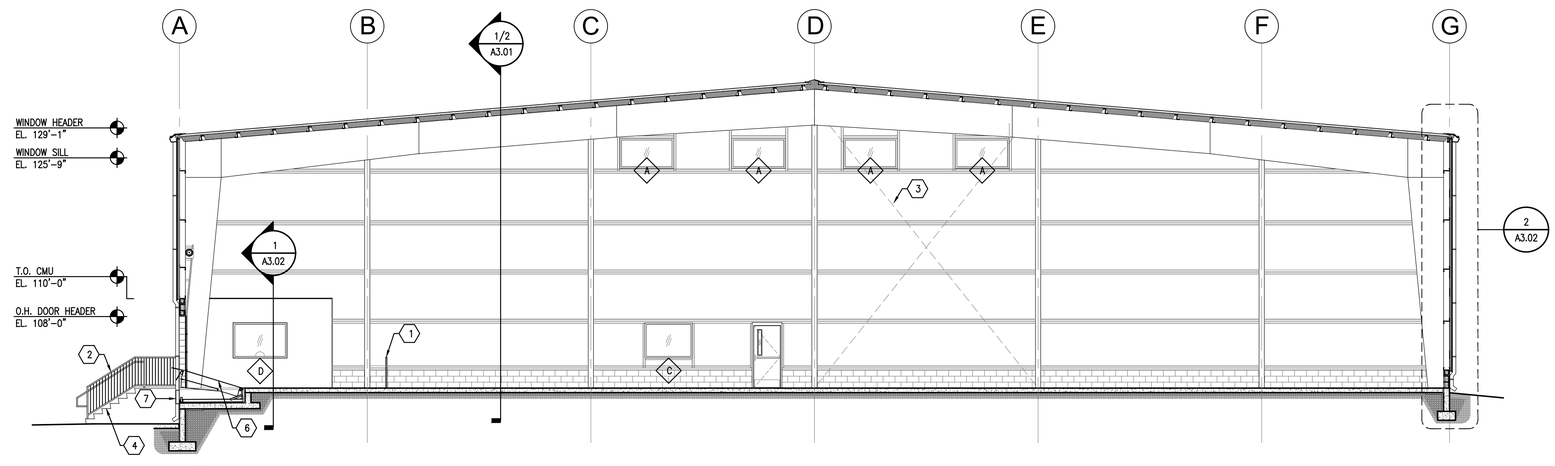

3 A3.01 BUILDING SECTION
1/8" = 1'-0"

GENERAL NOTES

A. REFER TO SHT. A1.01 'GENERAL NOTES'

B. PROVIDE BLOCKING AND SUPPLEMENTAL FRAMING @ O.H. DOOR COMPONENTS AS REQ'D BY MANF.

SHEET KEYNOTES

1. 1½" DIA. 44"(H) DOUBLE-RAIL GUARDRAIL
2. 6"(W) x 9"(H) ADA COMPLIANT ROOM SIGNAGE
3. P.E.M.B. X-BRACING – SEE P.E.M.B. 'ENGINEER OF RECORD' STAMPED / SIGNED DDWG'S FOR ADDITIONAL INFORMATION
4. REFER TO SHT. A3.02 FOR ENLARGED STAIR PLAN, SECTION, AND DETAILS
5. 1½" DIA. 44"(H) GUARDRAIL W/ ½" DIA. VERTICAL PICKETS SPACED @ 3¾" OC – SEE SECTION 9/A3.02
6. AIR POWERED DOCK LEVELER – COORDINATE LOCATION OF WALL MOUNTED CONTROLS W/ OWNER
7. LAMINATED DOCK BUMPER – 4½"(D) x 7"(H) x 10'-0"(L)
8. PROVIDE BLOCKING AND SUPPLEMENTAL FRAMING @ O.H. DOOR COMPONENTS AS REQ'D BY MANF.
9. HI-LOW DRINKING FOUNTAIN – SEE DETAILS 1/G1.02 AND 2/G1.02

CMW The Shape of Ideas

Architecture
Civil Engineering
Landscape Architecture
a: 249 East Main Street
Suite 100
Lexington, Kentucky 40507
o: (859) 254-6623
w: www.cmwaec.com

BILL PICKERING REGISTERED No. 4915 COMMONWEALTH OF KENTUCKY ARCHITECT
01 AUGUST 2025

BUILDING ELEVATIONS

DISTRIBUTION CENTER II - PHASE I
NEWCOMB OIL CO., LLC
951 WITHROW CT.
BARDSTOWN, KY 40004

PERMIT DOCUMENTS

Issue Date:	AUGUST 1, 2025
Drawn By:	JTH/JMT
Checked By:	BP
Revisions:	
	-
	-
	-
	-
	-
Mark	Date

AHJ SEAL

Project Number
25011.01

A3.01

Revit: 3MX24SHT_Newcomb A-SEC02 A-SEC01

File Name: Q:\Newcomb Oil\25011.01 Distribution Center II\02 DWG\03 ARCH\04 CD PHASE1\SHEET\A3.01.dwg

PLOT DATE: Friday, August 1, 2025 10:50:10 AM

GENERAL NOTES

A. REFER TO SHT. A1.01 'GENERAL NOTES'

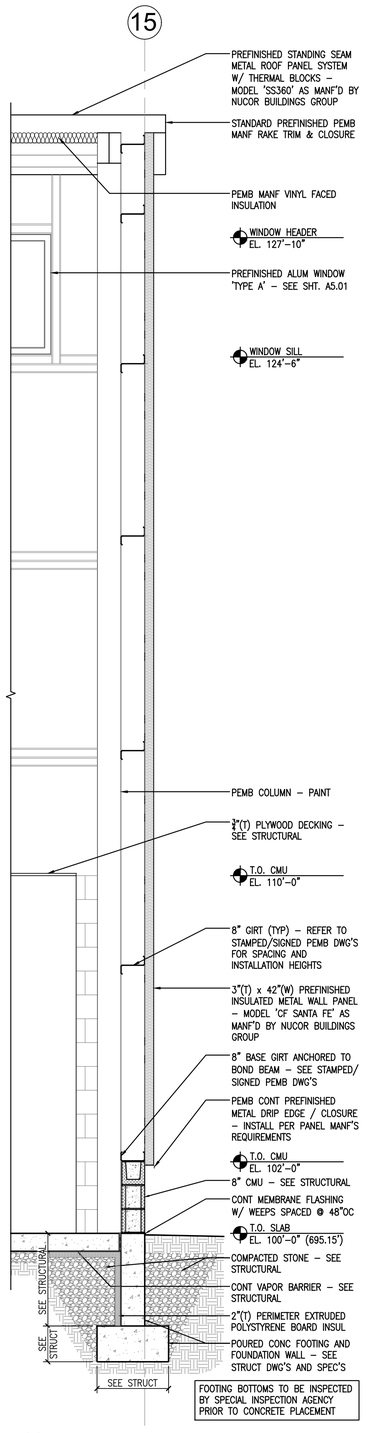

1 A3.02 PEMB WALL SECTION
1/2" = 1'-0"

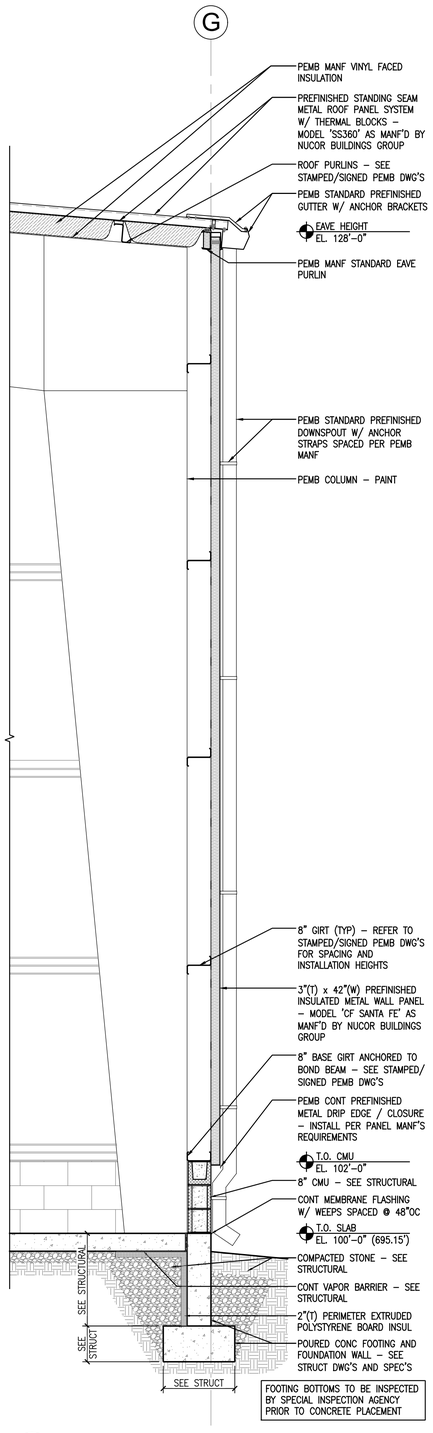

2 A3.02 PEMB WALL SECTION
1/2" = 1'-0"

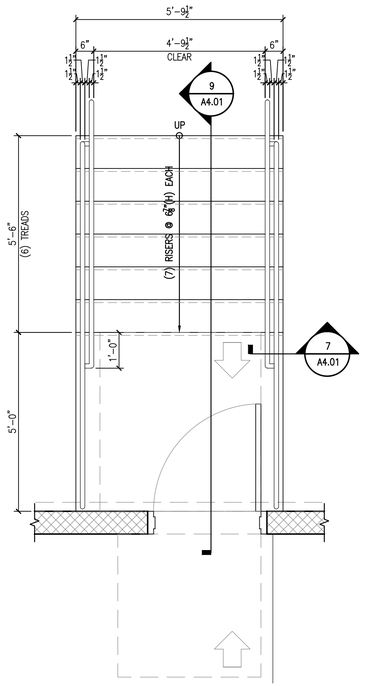

8 A3.02 EXT STAIR ENLARGED PLAN
1/2" = 1'-0"

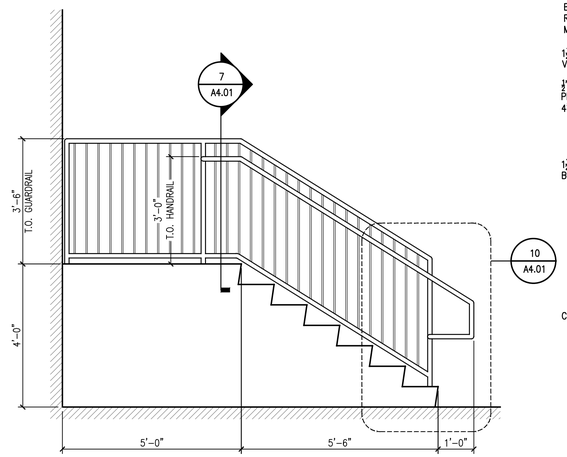

9 A3.02 EXT STAIR SECTION
1/2" = 1'-0"

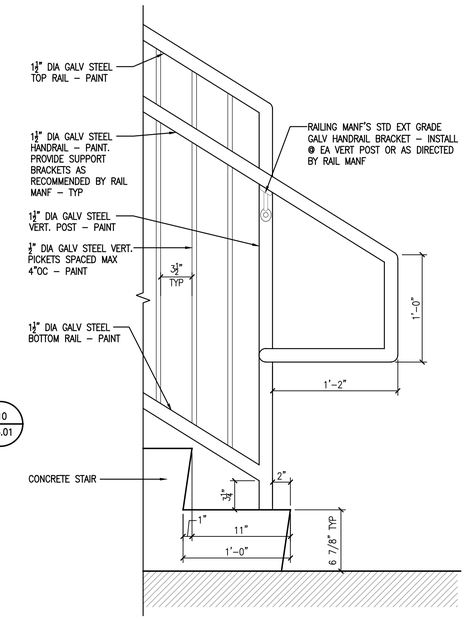

10 A3.02 EXT STAIR DETAIL
1 1/2" = 1'-0"

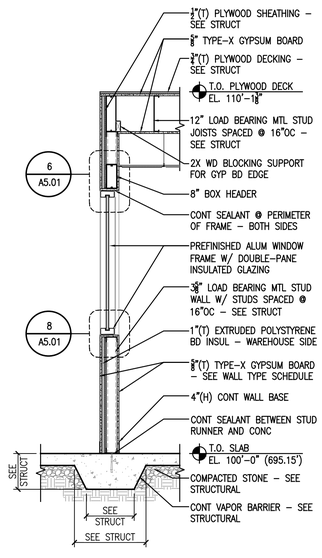

3 A3.02 WALL SECTION
1/2" = 1'-0"

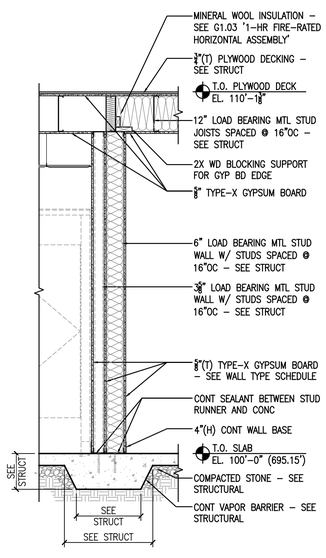

4 A3.02 WALL SECTION
1/2" = 1'-0"

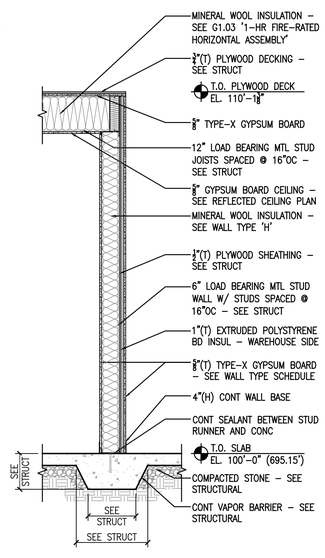

5 A3.02 WALL SECTION
1/2" = 1'-0"

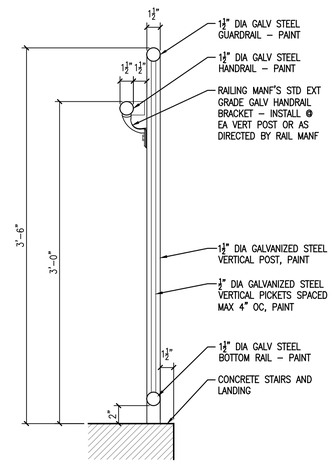

7 A3.02 EXT STAIR DETAIL
1 1/2" = 1'-0"

CMW The Shape of Ideas
Architecture
Civil Engineering
Landscape Architecture
a: 249 East Main Street
Suite 100
Lexington, Kentucky 40507
o: (859) 254-6623
w: www.cmwaec.com

BILL PICKERING REGISTERED No. 4915 COMMONWEALTH OF KENTUCKY ARCHITECT
01 AUGUST 2025

WALL SECTIONS / STAIR DETAILS

DISTRIBUTION CENTER II - PHASE I
NEWCOMB OIL CO., LLC
951 WITHROW CT.
BARDSTOWN, KY 40004

PERMIT DOCUMENTS

Issue Date:	AUGUST 1, 2025
Drawn By:	JTH/JMT
Checked By:	BP
Revisions:	
	-
	-
	-
	-
	-
Mark	Date

AHJ SEAL

Project Number
25011.01

A3.02

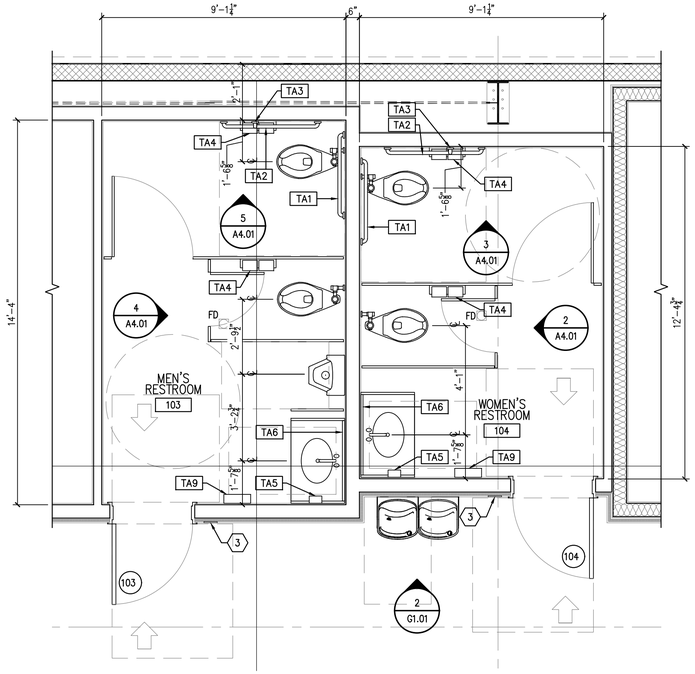

1 A4.01 ENLARGED RESTROOM PLANS
3/8" = 1'-0"

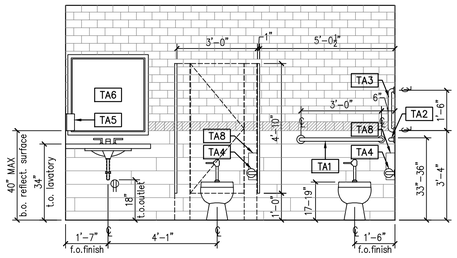

2 A4.01 INTERIOR ELEVATION
3/8" = 1'-0" (WOMEN'S RR 104)

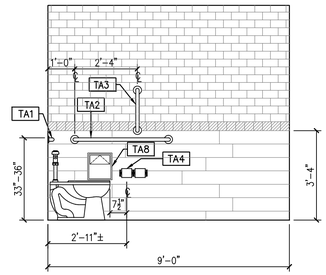

3 A4.01 INTERIOR ELEVATION
3/8" = 1'-0" (WOMEN'S RR 104)

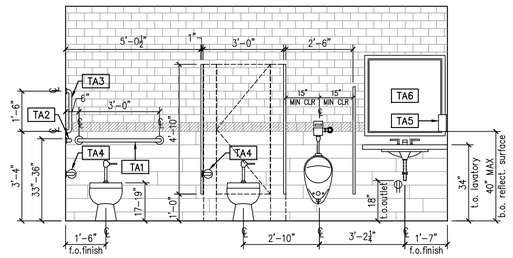

4 A4.01 INTERIOR ELEVATION
3/8" = 1'-0" (MEN'S RR 103)

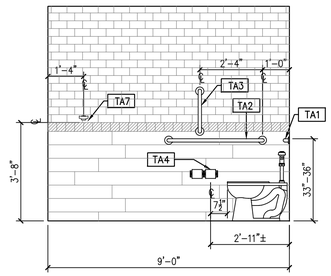

5 A4.01 INTERIOR ELEVATION
3/8" = 1'-0" (MEN'S RR 103)

GENERAL NOTES

A. REFER TO SHT. A1.01 'GENERAL NOTES'

B. COVER ALL EXPOSED PIPING/TRAP UNDER LAVATORIES – SEE PLUMBING DWG'S AND SPEC'S

C. REFER TO PLUMBING PLANS FOR HOSE BIBB LOCATIONS

D. REFER TO SHT. A6.01 FOR WALL TILE INFORMATION

Toilet / Custodial Accessories Schedule

PLAN TAG (TA#)	DESCRIPTION	MOUNTING HEIGHT AFF UNLESS OTHERWISE NOTED	TOILET ACCESSORY MOUNTING DIAGRAM (SEE SHEET G1.02)	MOUNTING TYPE: SURFACE	MOUNTING TYPE: SEMI-RECESSED	MOUNTING TYPE: RECESSED	TOILET ACCESSORIES SCHEDULE REMARKS
TA1	36" GRAB BAR (HORIZONTAL)	34" AFF TO CL	3B,4	●	–	–	–
TA2	42" GRAB BAR (HORIZONTAL)	34" AFF TO CL	3C,4	●	–	–	–
TA3	18" GRAB BAR (VERTICAL)	58" AFF TO TOP	3C	●	–	–	–
TA4	TOILET PAPER DISPENSER	SEE DIAGRAM	3A	●	–	–	OFCI
TA5	SOAP DISPENSER	SEE DIAGRAM	3D	●	–	–	–
TA6	MIRROR 36"x36"	SEE DIAGRAM	3D	●	–	–	2
TA7	DOUBLE ROBE HOOK	SEE DIAGRAM	–	●	–	–	1
TA8	SANITARY NAPKIN DISPOSAL	SEE DIAGRAM	3A	●	–	–	–
TA9	ELECTRIC HAND DRYER	PER ADA	3D	●	–	–	–

GENERAL:

A. INSTALL TOILET ACCESSORIES PER ADA REQUIREMENTS

B. OFCI – OWNER FURNISHED CONTRACTOR INSTALLED

C. EXAMINE SUBSTRATES AND AREAS, WITH INSTALLER PRESENT, FOR COMPLIANCE WITH REQUIREMENTS FOR INSTALLATION TOLERANCES AND OTHER CONDITIONS AFFECTING PERFORMANCE OF THE WORK. PROCEED WITH INSTALLATION ONLY AFTER UNSATISFACTORY CONDITIONS HAVE BEEN CORRECTED.

REMARKS:

1. INSTALL DOUBLE ROBE HOOK CENTERED ON INSIDE OF STALL DOOR – 44" A.F.F.
2. PROVIDE 2" STAINLESS STEEL FRAME

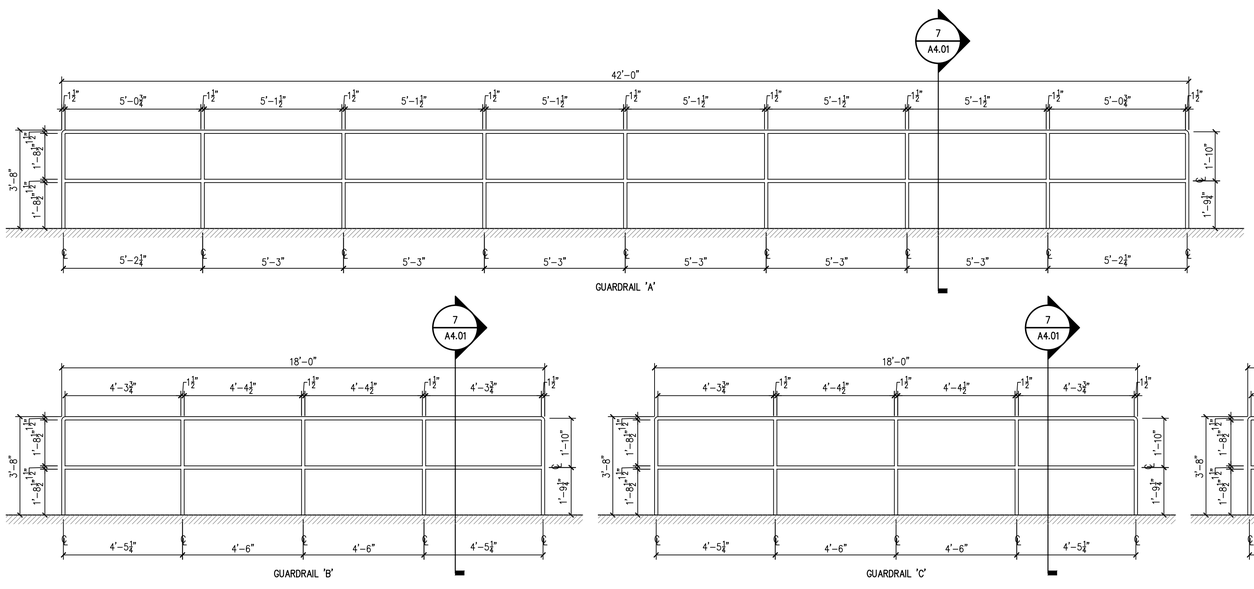

6 A4.01 INTERIOR GUARDRAIL ELEVATIONS
3/8" = 1'-0"

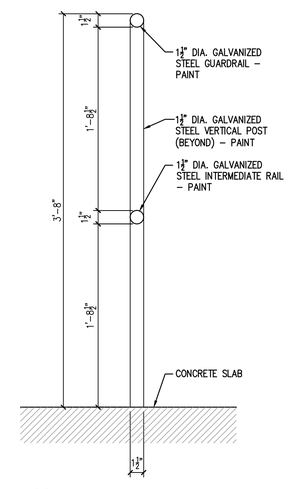

7 A4.01 GUARDRAIL DETAIL
1 1/2" = 1'-0"

CMW The Shape of Ideas
Architecture
Civil Engineering
Landscape Architecture
a: 249 East Main Street
Suite 100
Lexington, Kentucky 40507
o: (859) 254-6623
w: www.cmwaec.com

BILL PICKERING REGISTERED No. 4915 COMMONWEALTH OF KENTUCKY ARCHITECT
01 AUGUST 2025

ENLARGED FLOOR PLAN / INTERIOR ELEVATIONS

DISTRIBUTION CENTER II - PHASE I
NEWCOMB OIL CO., LLC
951 WITHROW CT.
BARDSTOWN, KY 40004

PERMIT DOCUMENTS

Issue Date:	AUGUST 1, 2025
Drawn By:	JMT
Checked By:	BP
Revisions:	
	-
	-
	-
	-
	-
Mark	Date

AHJ SEAL

Project Number
25011.01

A4.01

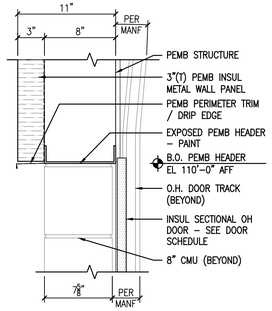

1 A5.01 DOOR HEAD DETAIL
1 1/2" = 1'-0"

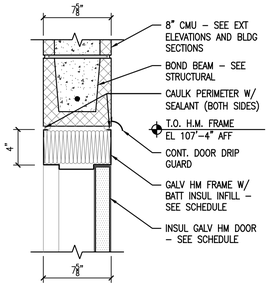

2 A5.01 DOOR HEAD DETAIL
1 1/2" = 1'-0"

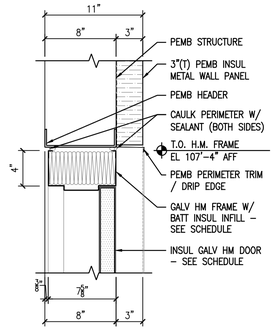

3 A5.01 DOOR HEAD DETAIL
1 1/2" = 1'-0"

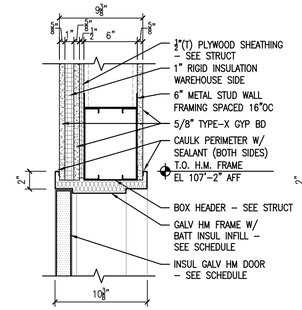

4 A5.01 DOOR HEAD DETAIL
1 1/2" = 1'-0"

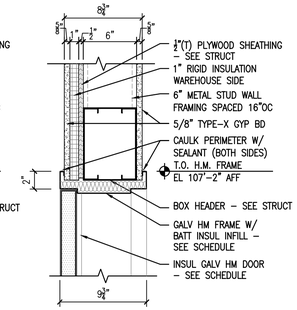

5 A5.01 DOOR HEAD DETAIL
1 1/2" = 1'-0"

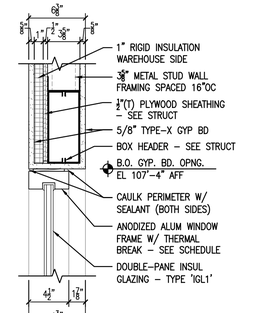

6 A5.01 WINDOW HEAD DETAIL
1 1/2" = 1'-0"

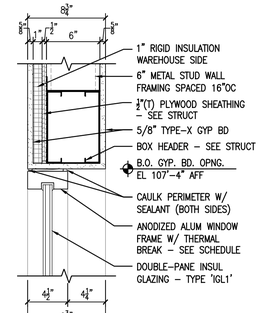

7 A5.01 WINDOW HEAD DETAIL
1 1/2" = 1'-0"

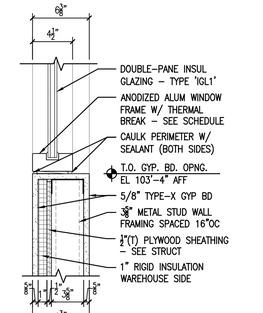

8 A5.01 WINDOW SILL DETAIL
1 1/2" = 1'-0"

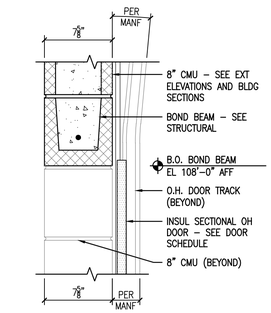

9 A5.01 DOOR HEAD DETAIL
1 1/2" = 1'-0"

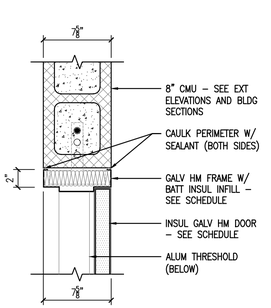

10 A5.01 DOOR JAMB DETAIL
1 1/2" = 1'-0"

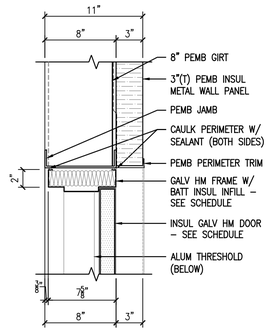

11 A5.01 DOOR JAMB DETAIL
1 1/2" = 1'-0"

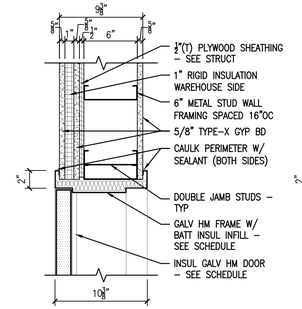

12 A5.01 DOOR JAMB DETAIL
1 1/2" = 1'-0"

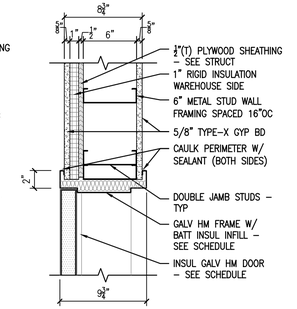

13 A5.01 DOOR JAMB DETAIL
1 1/2" = 1'-0"

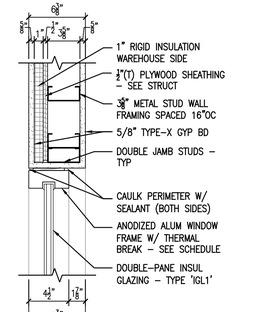

14 A5.01 WINDOW JAMB DETAIL
1 1/2" = 1'-0"

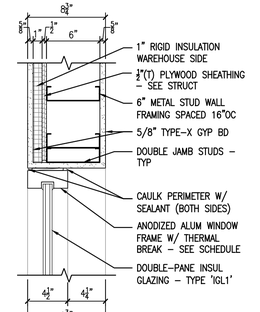

15 A5.01 WINDOW JAMB DETAIL
1 1/2" = 1'-0"

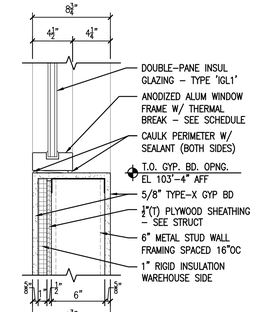

16 A5.01 WINDOW SILL DETAIL
1 1/2" = 1'-0"

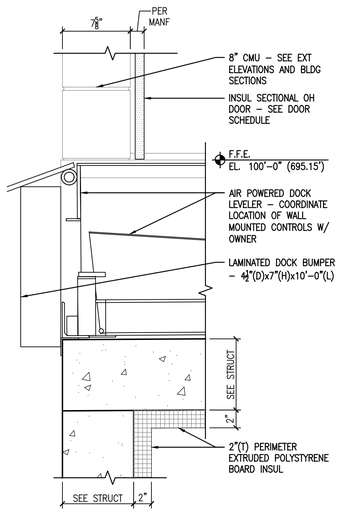

17 A5.01 DOCK LEVELER DETAIL
1 1/2" = 1'-0"

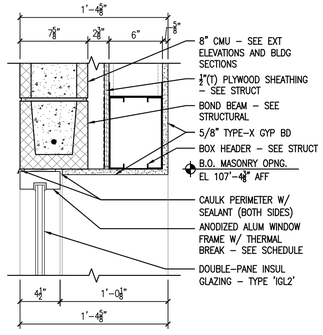

18 A5.01 WINDOW HEAD DETAIL
1 1/2" = 1'-0"

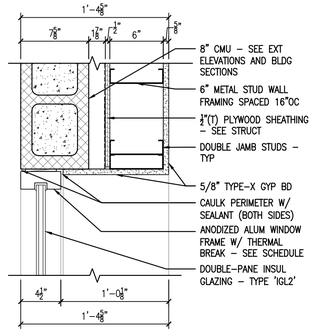

19 A5.01 WINDOW JAMB DETAIL
1 1/2" = 1'-0"

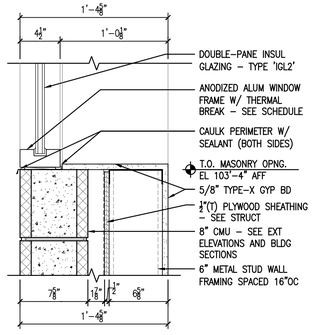

20 A5.01 WINDOW JAMB DETAIL
1 1/2" = 1'-0"

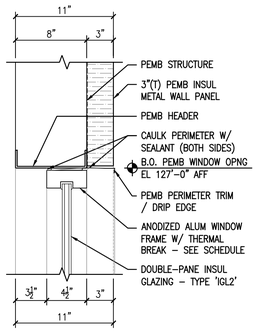

21 A5.01 WINDOW HEAD DETAIL
1 1/2" = 1'-0"

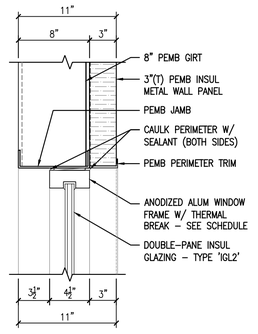

22 A5.01 WINDOW JAMB DETAIL
1 1/2" = 1'-0"

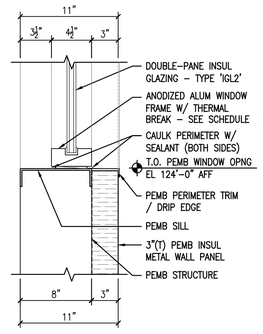

23 A5.01 WINDOW SILL DETAIL
1 1/2" = 1'-0"

CMW The Shape of Ideas

Architecture
Civil Engineering
Landscape Architecture
a: 249 East Main Street
Suite 100
Lexington, Kentucky 40507
o: (859) 254-6623
w: www.cmwaec.com

BILL PICKERING REGISTERED No. 4915 COMMONWEALTH OF KENTUCKY ARCHITECT
01 AUGUST 2025

DOOR AND WINDOW DETAILS

DISTRIBUTION CENTER II - PHASE I
NEWCOMB OIL CO., LLC
951 WITHROW CT.
BARDSTOWN, KY 40004

PERMIT DOCUMENTS

Issue Date:	AUGUST 1, 2025
Drawn By:	JMT
Checked By:	BP
Revisions:	
	-
	-
	-
	-
	-
Mark	Date

AHJ SEAL

Project Number
25011.01

A5.01

Xrefs: 30X24SHT_Newcomb

File Name: Q:\Newcomb Oil\25011.01 Distribution Center II\02 DWG\03 ARCH\04 CD PHASE\SHEET\A5.01.dwg

PLOT DATE: Monday, August 4, 2025 10:19:13 AM

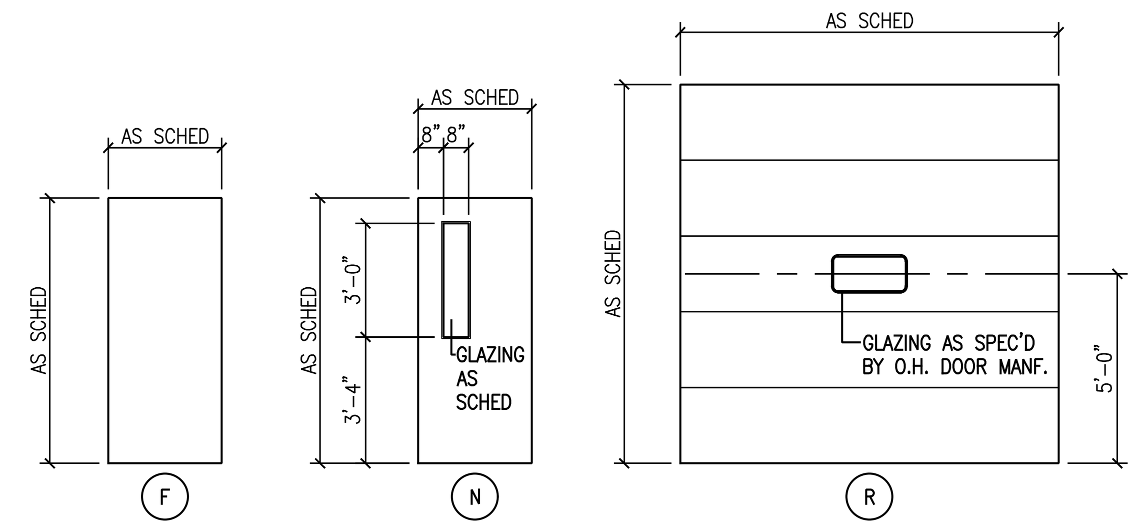

1 A5.01 DOOR ELEVATIONS
1/4" = 1'-0"

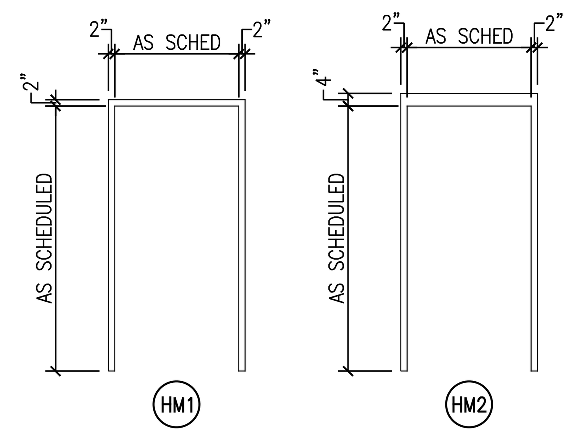

2 A5.01 DOOR FRAME ELEVATIONS
1/4" = 1'-0"

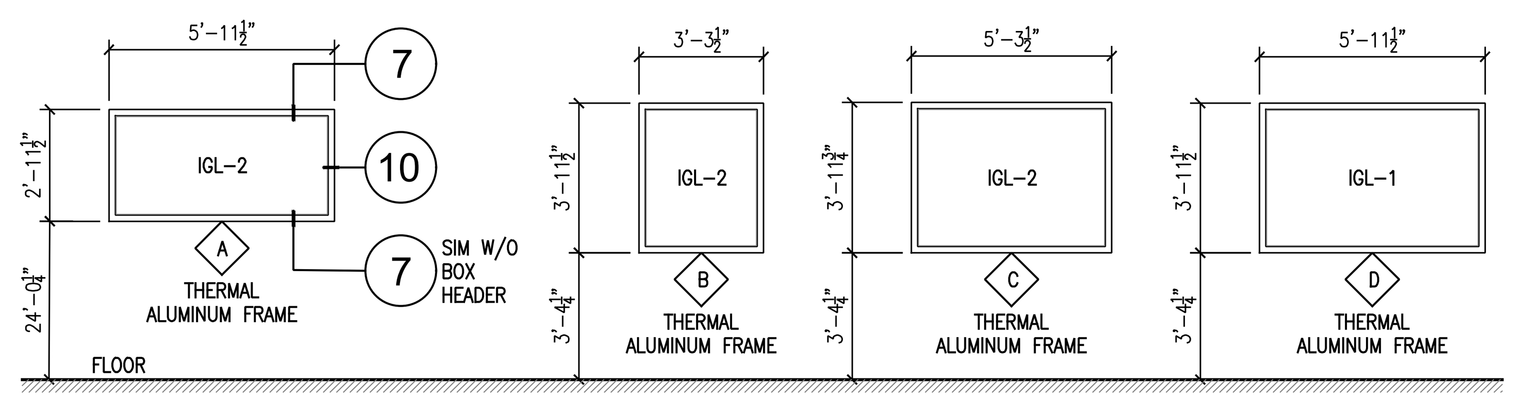

3 A5.01 WINDOW ELEVATIONS
1/4" = 1'-0"

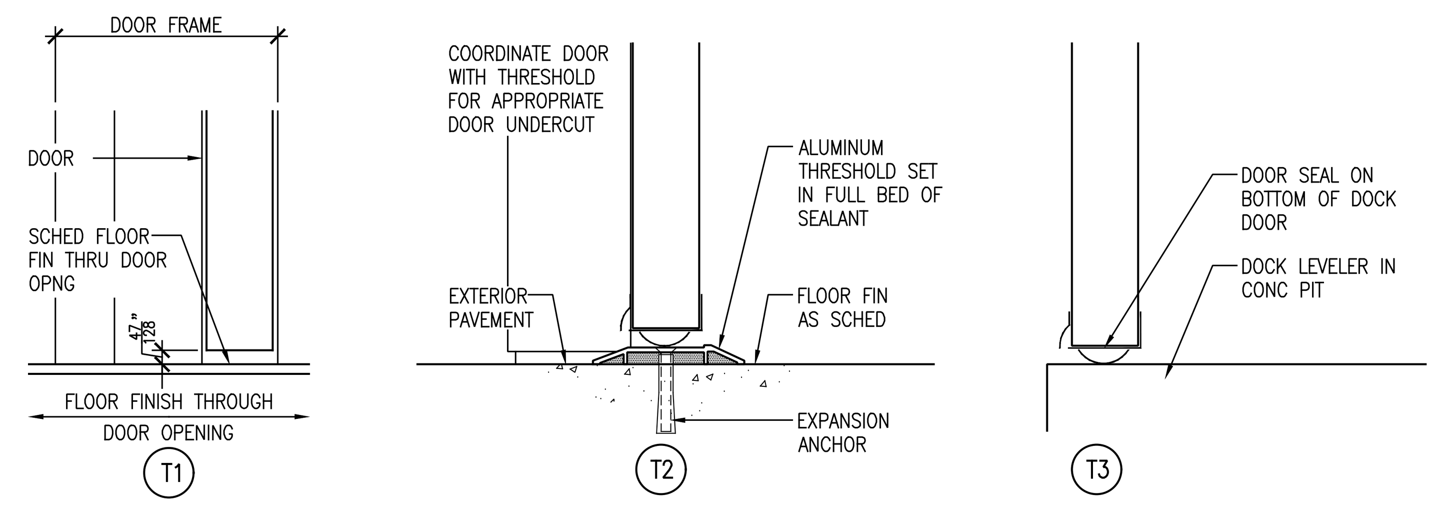

4 A5.01 DOOR OPENING THRESHOLDS
3" = 1'-0"

DOOR SCHEDULE

DOOR NO.	OPENING: FROM (ROOM NAME)	OPENING: TO (ROOM NAME)	OPENING: WIDTH	OPENING: HEIGHT	OPENING: NO DOOR LEAVES	FRAME: MATERIAL	FRAME: GA	FRAME: THERMAL RATED (T)	FRAME: FINISH	FRAME: ELEV	FRAME: JAMB DEPTH	DOOR: MATERIAL	DOOR: GA	DOOR: CORE	DOOR: THK	DOOR: FINISH	DOOR: ELEV	HARDWARE: SET NO	HARDWARE: DEG CLSR	HARDWARE: KEYSIDE RM NO	DETAILS: HEAD	DETAILS: JAMB	DETAILS: THR	THRESHOLD: TYPE	FIRE: MIN	REMARKS	DOOR NO.
100A	EXTERIOR	WAREHOUSE 100	12'-0"	10'-0"	-	STEEL	-	-	P	1	PEMB	STEEL	-	INSUL	-	PRE	R	MANF	-	-	1/A5.01	-	4/A6.01	T3	-	2	100A
100B	EXTERIOR	WAREHOUSE 100	3'-0"	7'-0"	1	GALV HM	16	T	P	HM2	7 5/8"	GALV HM	16	INSUL	1 3/4"	P	N	1	105	EXTERIOR	2/A5.01	10/A5.01	4/A6.01	T2	-	1	100B
100C	EXTERIOR	WAREHOUSE 100	6'-0"	8'-0"	-	STEEL	-	-	P	1	PEMB	STEEL	-	INSUL	-	PRE	R	MANF	-	-	1/A5.01	-	17/A5.01	T3	-	2	100C
100D	EXTERIOR	WAREHOUSE 100	6'-0"	8'-0"	-	STEEL	-	-	P	1	PEMB	STEEL	-	INSUL	-	PRE	R	MANF	-	-	1/A5.01	-	17/A5.01	T3	-	2	100D
100E	EXTERIOR	WAREHOUSE 100	3'-0"	7'-0"	1	GALV HM	16	T	P	HM2	7 5/8"	GALV HM	16	INSUL	1 3/4"	P	N	1	105	EXTERIOR	2/A5.01	10/A5.01	4/A6.01	T2	-	1	100E
100F	EXTERIOR	WAREHOUSE 100	6'-0"	8'-0"	-	STEEL	-	-	P	1	PEMB	STEEL	-	INSUL	-	PRE	R	MANF	-	-	1/A5.01	-	17/A5.01	T3	-	2	100F
100G	EXTERIOR	WAREHOUSE 100	6'-0"	8'-0"	-	STEEL	-	-	P	1	PEMB	STEEL	-	INSUL	-	PRE	R	MANF	-	-	1/A5.01	-	17/A5.01	T3	-	2	100G
100H	EXTERIOR	WAREHOUSE 100	3'-0"	7'-0"	1	GALV HM	16	T	P	HM2	7 5/8"	GALV HM	16	INSUL	1 3/4"	P	N	1	105	EXTERIOR	2/A5.01	10/A5.01	4/A6.01	T2	-	1	100H
100I	EXTERIOR	WAREHOUSE 100	3'-0"	7'-0"	1	GALV HM	16	T	P	HM2	7 5/8"	GALV HM	16	INSUL	1 3/4"	P	N	1	105	EXTERIOR	3/A5.01	10-11/A5.01	4/A6.01	T2	-	1	100I
100J	EXTERIOR	WAREHOUSE 100	3'-0"	7'-0"	1	GALV HM	16	T	P	HM2	7 5/8"	GALV HM	16	INSUL	1 3/4"	P	N	1	105	EXTERIOR	3/A5.01	10-11/A5.01	4/A6.01	T2	-	1	100J
101	WAREHOUSE 100	OFFICE 101	3'-0"	7'-0"	1	GALV HM	16	T	P	HM1	9 3/4"	GALV HM	16	INSUL	1 3/4"	P	N	3	105	WAREHOUSE 100	5/A5.01	13/A5.01	-	-	-		101
102	WAREHOUSE 100	BREAK ROOM 102	3'-0"	7'-0"	1	GALV HM	16	T	P	HM1	9 3/4"	GALV HM	16	INSUL	1 3/4"	P	N	3	105	WAREHOUSE 100	5/A5.01	13/A5.01	-	-	-		102
103	WAREHOUSE 100	MEN'S RESTROOM 103	3'-0"	7'-0"	1	GALV HM	16	T	P	HM1	9 3/4"	GALV HM	16	INSUL	1 3/4"	P	F	2	105	WAREHOUSE 100	5/A5.01	13/A5.01	-	-	-		103
104	WAREHOUSE 100	WOMEN'S RESTROOM 104	3'-0"	7'-0"	1	GALV HM	16	T	P	HM1	9 3/4"	GALV HM	16	INSUL	1 3/4"	P	F	2	105	WAREHOUSE 100	5/A5.01	13/A5.01	-	-	-		104
105	WAREHOUSE 100	PUMP ROOM 105	3'-0"	7'-0"	1	GALV HM	16	T	P	HM1	10 3/8"	GALV HM	16	INSUL	1 3/4"	P	F	4	105	WAREHOUSE 100	4/A5.01	12/A5.01	-	T2	45		105

REMARKS:
1. DESIGNATED AS EMERGENCY EGRESS DOOR
2. SECTIONAL OVERHEAD DOOR – GLAZING SPECIFIED WITH DOOR ASSEMBLY

ROOM FINISH SCHEDULE

ROOM NO.	ROOM NAME	FLOOR: MATERIAL	FLOOR: FINISH	BASE: FINISH	NORTH WALL: MATERIAL	NORTH WALL: FINISH	SOUTH WALL: MATERIAL	SOUTH WALL: FINISH	EAST WALL: MATERIAL	EAST WALL: FINISH	WEST WALL: MATERIAL	WEST WALL: FINISH	CEILING: MATERIAL	CEILING: FINISH	CEILING: HEIGHT	REMARKS REFER TO KEYED NOTES	ROOM NO.
100	WAREHOUSE	CONC	-	-	-	-	-	-	-	-	-	-	-	-	SLOPED	-	100
101	OFFICE	CONC	-	VINYL	GYP BD	P	GYP BD	P	GYP BD	P	GYP BD	P	ACT	PRE	8'-0"	-	101
102	BREAK ROOM	CONC	-	VINYL	GYP BD	P	GYP BD	P	GYP BD	P	GYP BD	P	ACT	PRE	8'-0"	-	102
103	MEN'S RESTROOM	CONC	-	CER	CER	PRE	CER	PRE	CER	PRE	CER	PRE	ACT	PRE	8'-0"	-	103
104	WOMEN'S RESTROOM	CONC	-	CER	CER	PRE	CER	PRE	CER	PRE	CER	PRE	ACT	PRE	8'-0"	-	104
105	PUMP ROOM	CONC	-	VINYL	GYP BD	P	GYP BD	P	GYP BD	P	GYP BD	P	GYP BD	P	8'-11 3/8"	-	105

DOOR HARDWARE SCHEDULE

SET	QTY	DESCRIPTION	DOORS
1	3 EA 1 EA 2 EA 1 EA 1 EA 1 EA 1 EA	4.5X4.5 NRP HINGE PANIC HARDWARE MORTISE CYLINDER SURFACE CLOSER RAIN DRIP GASKETING THRESHOLD	100B 100E 100H 100I 100J
2	3 EA 1 EA 2 EA 1 EA 1 EA 1 EA	4.5X4.5 HINGE PUSH PLATE PULL PLATE SURFACE CLOSER KICK PLATE WALL STOP	103 104
3	3 EA 1 EA 2 EA 1 EA 1 EA	4.5X4.5 HINGE OFFICE LOCK SURFACE CLOSER KICK PLATE WALL STOP	101 102
4	3 EA 1 EA 2 EA 1 EA 1 EA	4.5X4.5 HINGE STOREROOM LOCK SURFACE CLOSER KICK PLATE WALL STOP	105

GLAZING SCHEDULE

MARK	THICK	DESCRIPTION	MARKING	COLOR	RATING	REMARKS
IGL-1	1"	INSULATING	-	CLEAR	-	INTERSPACE ARGON FILLED / LOW-E COATING 3RD SURFACE
IGL-2	1"	INSULATING	-	TINTED	-	INTERSPACE ARGON FILLED / LOW-E COATING 3RD SURFACE

GENERAL NOTES:
A. REFER TO SPECIFICATIONS FOR HOLLOW METAL DOOR AND FRAME STOP AND APPLIED GLAZING STOP REQUIREMENTS.
B. HOLLOW METAL FRAME APPLIES METAL GLAZING STOPS SHALL BE FINISH PAINTED PRIOR TO INSTALLATION OF GLAZING – TOUCH-UP FINISH PAINT FOLLOWING APPLIED STOP INSTALLATION.
C. USE TEMPERED SAFETY GLASS IN LOCATIONS REQUIRED BY THE KENTUCKY BUILDING CODE (CURRENT EDITION)

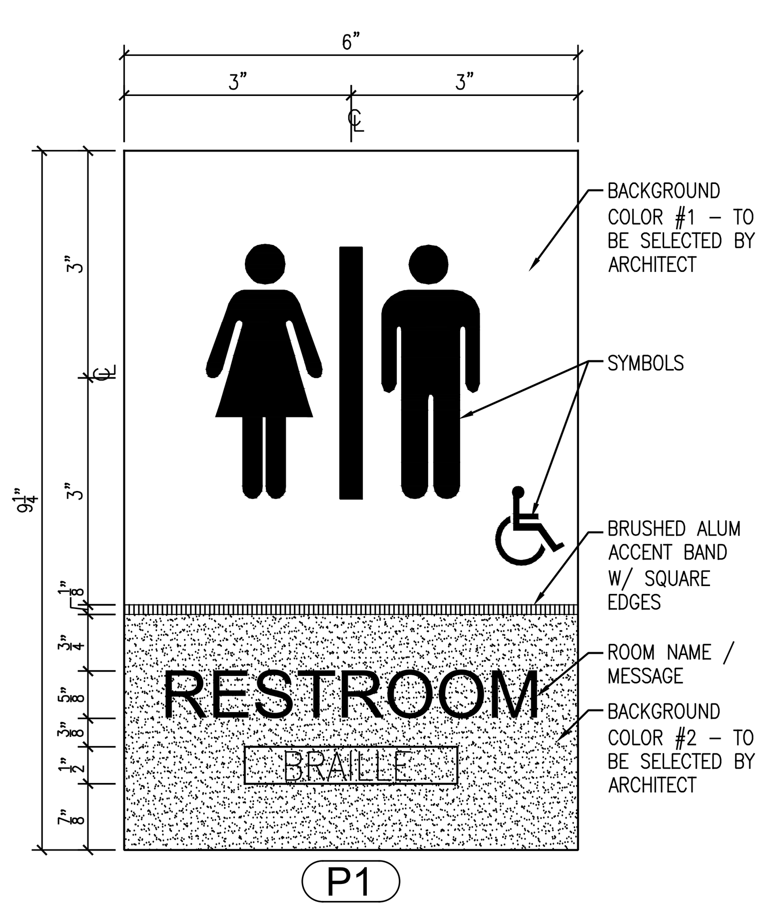

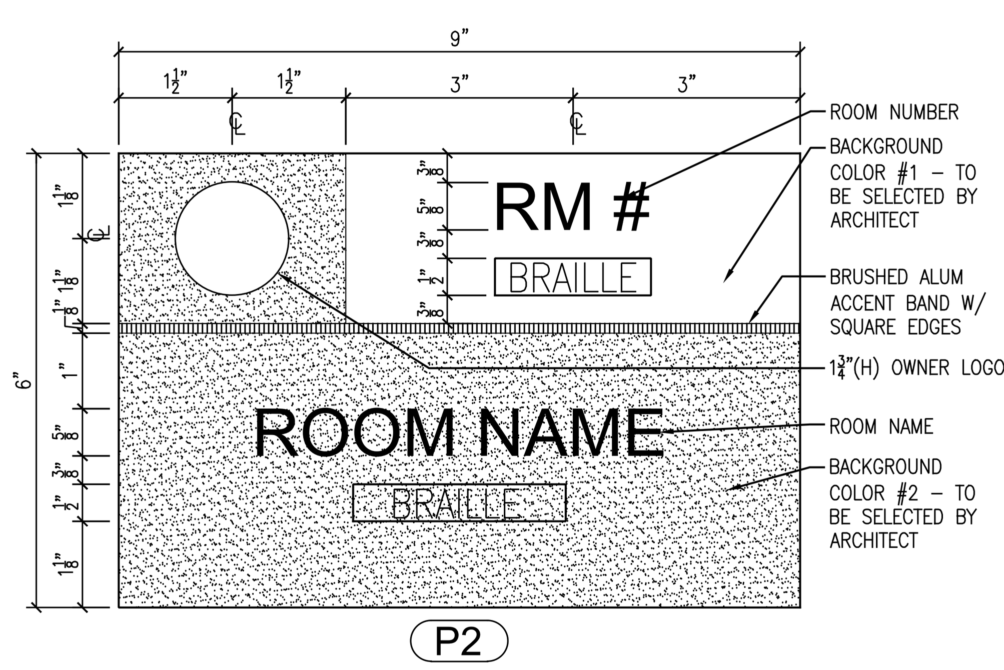

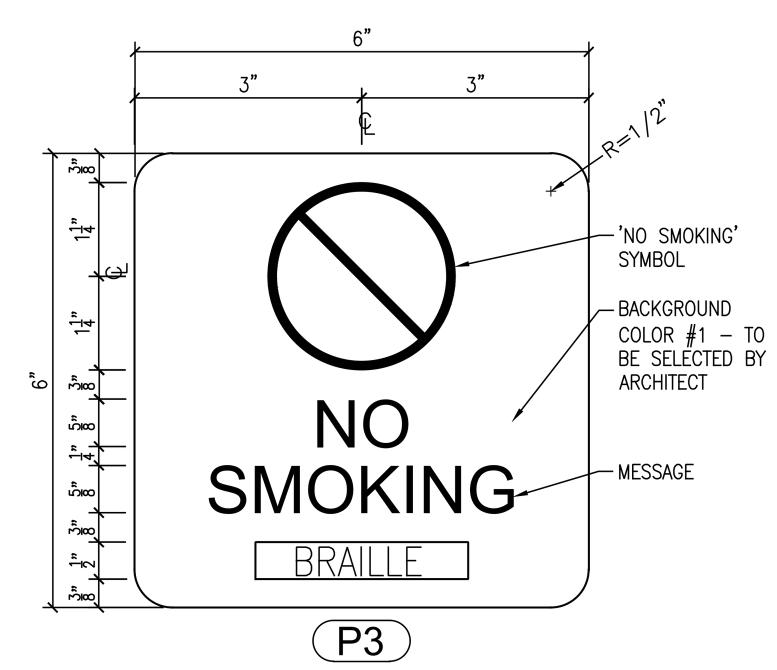

ROOM SIGNAGE SCHEDULE

DOOR NO.	ROOM NO.	SIGN LOCATION	MESSAGE	SIGN TYPE	SYMBOL
101	101	WAREHOUSE 100	OFFICE	P2	OWNER LOGO
102	102	WAREHOUSE 100	UTILITY	P2	OWNER LOGO
-	102	BREAK ROOM 102	NO SMOKING	P3	NO SMOKING
103	103	WAREHOUSE 100	MEN'S RESTROOM	P1	GENDER - MALE ACCESSIBILITY SYMBOL
-	103	MEN'S RESTROOM 103	NO SMOKING	P3	NO SMOKING
104	104	WAREHOUSE 100	WOMEN'S RESTROOM	P1	GENDER - FEMALE ACCESSIBILITY SYMBOL
-	104	WOMEN'S RESTROOM 104	NO SMOKING	P3	NO SMOKING
105	105	WAREHOUSE 100	PUMP ROOM	P2	OWNER LOGO
-	105	PUMP ROOM 105	NO SMOKING	P3	NO SMOKING

GENERAL NOTES:
1. GC TO COORDINATE FINAL DESIGN AND LAYOUT OF INTERIOR ROOM SIGNAGE WITH OWNER.
2. INSTALL SIGNS LEVEL, PLUMB, WITH SIGN SURFACES FREE FROM DISTORTION OR OTHER DEFECTS IN APPEARANCE.
3. ATTACH WALL MOUNTED SIGNAGE TO WALL SURFACES USING MANUFACTURER'S STANDARD DOUBLE-SIDED TAPE.
4. IT SHALL BE THE RESPONSIBILITY OF THE FABRICATOR AND INSTALLER TO COMPLY WITH ALL SIGNAGE REQUIREMENTS OF THE AMERICANS WITH DISABILITIES ACT (ADA). SIGN MANUFACTURER SHALL NOTIFY THE ARCHITECT IN WRITING IF ADA REQUIREMENTS DIFFER FROM THE SPECIFICATIONS.

CMW
The Shape of Ideas
Architecture
Civil Engineering
Landscape Architecture
a: 249 East Main Street
Suite 100
Lexington, Kentucky 40507
o: (859) 254-6623
w: www.cmwaec.com

BILL PICKERING REGISTERED No. 4915 COMMONWEALTH OF KENTUCKY ARCHITECT
01 AUGUST 2025

DOOR SCHEDULE AND DETAILS

DISTRIBUTION CENTER II - PHASE I
NEWCOMB OIL CO., LLC
951 WITHROW CT.
BARDSTOWN, KY 40004

PERMIT DOCUMENTS

Issue Date:	AUGUST 1, 2025
Drawn By:	JTH/JMT
Checked By:	BP

Revisions:

Mark	Date
	-
	-
	-
	-
	-

AHJ SEAL

Project Number
25011.01

A6.01

File Name: Q:\Newcomb Oil\25011.01 Distribution Center II\02 DWG\03 ARCH\04 CD PHASE\SHEET\A6.01.dwg
Xrefs: 36X24SHT_Newcomb
PLOT DATE: Monday, August 4, 2025 11:33:19 AM